3.5W Explosion Proof Smoke Detector
C1D1 - 120V AC - Ceiling Mount - IP44 - (4) 3/4" NPT
Instruction Manual

Thank you for your purchase of the Larson Electronics EXP-SD-SFC-120V-V1.

WARNING:

READ CAREFULLY BEFORE INSTALLING FIXTURE. RETAIN THESE INSTRUCTIONS FOR FUTURE REFERENCE.
CRITICAL SAFETY INSTRUCTIONS:

- INSTALLATION SHOULD ONLY BE CONDUCTED BY A QUALIFIED ELECTRICIAN IN ACCORDANCE WITH NEC AND ANY RELEVANT LOCAL BUILDING CODES.
- RISK OF FIRE OR ELECTRIC SHOCK. FIXTURE INSTALLATION REQUIRES KNOWLEDGE OF FIXTURE'S ELECTRICAL SYSTEMS. IF NOT QUALIFIED, CONTACT A QUALIFIED ELECTRICIAN.
- BE CERTAIN ELECTRICAL POWER IS OFF BEFORE AND DURING INSTALLATION AND MAINTENANCE.
- MAKE SURE THE SUPPLY VOLTAGE IS THE SAME AS THE FIXTURE'S RATED VOLTAGE.
- TO PREVENT WIRING DAMAGE OR ABRASION, DO NOT EXPOSE WIRING TO EDGES OF SHEET METAL OR SHARP OBJECTS. SUITABLE FOR DAMP LOCATIONS.

IMPORTANT

READ CAREFULLY BEFORE INSTALLING THIS FIXTURE. SAVE THESE INSTRUCTIONS FOR FUTURE REFERENCE. THE EXP-SD-SFC-120V-V1 MUST BE WIRED IN ACCORDANCE WITH NATIONAL ELECTRICAL CODE AND ALL APPLICABLE LOCAL CODES. PROPER GROUNDING IS REQUIRED FOR SAFETY.

WE STRONGLY ENCOURAGE ONLY A LICENSED ELECTRICIAN INSTALL, OPERATE AND MAINTAIN THIS PRODUCT. IF YOU ARE NOT QUALIFIED OR UNFAMILIAR WITH ANY ASPECT OF THIS INSTRUCTION SHEET, CONSULT AN ELECTRICIAN. THERE ARE NO SERVICEABLE PARTS INSIDE.

WARNING: MAKE SURE POWER IS TURNED **OFF** BEFORE STARTING THE INSTALLATION OR PERFORMING ANY MAINTENANCE.

RISK OF FIRE/ELECTRIC SHOCK – DISCONNECT POWER AT BREAKER BEFORE INSTALLING OR SERVICING.
RISK OF PERSONAL INJURY – FIXTURE MAY BECOME UNSTABLE OR DAMAGED IF NOT INSTALLED PROPERLY.
RISK OF BURN – ALLOW FIXTURE TO COOL BEFORE SERVICING.

WARNING

TO AVOID THE RISK OF FIRE, EXPLOSION OR ELECTRIC SHOCK, THIS PRODUCT SHOULD BE INSTALLED, INSPECTED AND MAINTAINED BY A QUALIFIED ELECTRICIAN ONLY, IN ACCORDANCE WITH ALL APPLICABLE ELECTRICAL CODES.

TO AVOID ELECTRIC SHOCK:

- BE CERTAIN ELECTRICAL POWER IS OFF BEFORE AND DURING INSTALLATION AND MAINTENANCE.
- PRODUCT MUST BE CONNECTED TO A WIRING SYSTEM WITH AN EQUIPMENT-GROUNDING CONDUCTOR.

TO AVOID EXPLOSION:

- MAKE SURE THE SUPPLY VOLTAGE IS WITHIN THE VOLTAGE RATING.
- ENSURE THE MARKED T RATING IS LESS THAN THE IGNITION TEMPERATURE OF THE HAZARDOUS ATMOSPHERE.
- DO NOT OPERATE IN AMBIENT TEMPERATURES ABOVE THOSE INDICATED ON THE PRODUCT NAMEPLATE.
- DO NOT OPERATE IF THE LENS, CORD, SEALS, HOUSING, RECEPTACLES, ETC. IS CRACKED OR DAMAGED. IF SO, DISCONTINUE USE AND CONTACT MANUFACTURER FOR REPLACEMENT PARTS.
- ALL FASTENERS SHOULD BE PROPERLY SEATED.

Magnetic Warning

- PEOPLE WITH PACEMAKERS SHOULD CONSULT THEIR PHYSICIAN(S) BEFORE USE. ELECTROMAGNETIC FIELDS IN CLOSE PROXIMITY TO HEART PACEMAKER COULD CAUSE PACEMAKER INTERFERENCE OR PACEMAKER FAILURE.
- KEEP FINGERS AWAY FROM MAGNET WHEN MOUNTING AS INJURY COULD OCCUR.

The EXP-SD-SFC-120V-V1 from Larson Electronics is an Explosion Proof Smoke Detector that is designed for combustible facilities. This 120V AC smoke alarm contains three sets of relays, a magnetic test switch and an LED indicator. Constructed of polycarbonate/ABS and copper-free aluminum, the P44 rated unit is compatible with ceiling mounting applications. This unit has a junction box with flying leads fed through a hub.

WIRING

The EXP-SD-SFC-120V-V1 contains terminals that accept 14-18 AWG shielded stranded copper wire during installation. perators may access a total of four, 3/4 NPT hubs to complete electrical connections.

Standard pigtail(flying leads) wiring

We strongly encourage a licensed electrician install this product, in all locations especially in outdoor areas where weatherproofing may be required. Universal voltage driver permits operation at 120V AC.

Warning: *Check product label for correct input voltage!*

Attach supply line wires to the appropriate light fixture wires as shown in the diagram ➔



Secure each pair of wires according to the diagram. Utilize a junction box or similar device and take precautionary steps for weatherproofing all connections if installed in a location where water may come in contact with the unit. Ensure the unit is properly grounded and that wiring is done according to all local and national electrical/building codes.

OPERATION

WARM UP

When the detector is initially powered up, a warm-up period of 1-2 seconds is allotted f internal checks and communication. During this time, the LED is off and the current level is 3 r After the checks are completed, normal operation will be indicated by the LED flashing every fo seconds (current level is 4 mA).

f the detector is unable to reach the normal operating mode, the warm-up period ma extend to five seconds, followed by a critical fault or an advisory fault (see Table 1 for a current levels). f the problem persists, check for any loose wiring connections, ensure that th voltage supply is sufficient, and cycle power if necessary.

OUTPUTS

Rela s

The EXP-SD-SFC-120V-V1 detector is furnished with smoke alarm, fault, and auxiliary relays. All three relays are rated to 5 amperes at 30 Vdc.

The smoke alarm relay has a single set of terminals and normally open / normally closed contacts, and normally de-energized operation.

The fault relay has a single set of terminals and normally open contacts, and normally energized operation.

The auxiliary relay has a single set of terminals and normally open / normally closed contacts, and normally de-energized operation.

IMPORTANT

The auxiliary relay functions as pre-alarm.

O to 2 A Out ut

This EXP-SD-SFC-120V-V1 provides a to 20 mA de current for transmitting detector status information to other devices. The circuit is wired in a non-isolated configuration and can drive a maximum loop resistance of 300 ohms from 12 to 17 .9 Vdc, 500 ohms from .18 to 19.9 Vdc, and 600 ohms from 20 to 30 Vdc. Table 1 defines the current levels and corresponding detector status. The output is calibrated at the factory, with no need for field calibration.

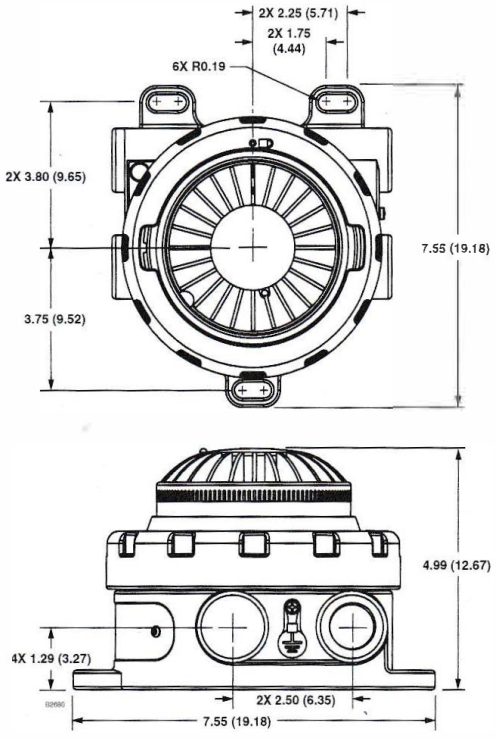

Dimensions in Inches (cm)

Table 1—Detector Status Conditions Indicated by Current Level

Current Level (±0.3 mA)	Detector Status
0 mA	Power Fault
1 mA	Critical Fault
3 mA	Warm up
4 mA	Normal
6 mA	Advisory Fault
16 mA	Pre-Alarm
20 mA	Smoke Alarm

NOTE

The output of the to 20 mA current loop is monitored by the fault detection circuitry of the EXP-SD-SFC-120V-V1. Therefore, an open circuit on the loop will cause the fault relay to change state.

An alarm will normally override a fault, unless the nature of the fault impairs the ability of the detector to generate or maintain an alarm output (i.e., loss of operating power)

INTEGRAL WIRING COMPARTMENT

All external wiring to the device is connected within the integral junction box. The detector is furnished with a maximum of four conduit entries, with either 3/4 inch NPT or M25 threads.

LED

An LED, located on the detector (see Figure 1), indicates normal operation and notifies personnel of an alarm. Table 2 indicates t(le condition of the LED for each status.

Table 2-Detector Status ndicator

Detector Status	LED Indicator
Power On / Normal Operation	Steady Off 1 blink on every 4 seconds
Alarm	Steady On

LATCHING

A detector configured for latching operation will remain in an alarm state indefinitely, after an alarm occurs.

NON LATCHING

A detector configured for non-latching operation will check the alarm status of the detector once every 1 seconds. nce smoke falls below the alarm threshold, the alarm annunciation will clear within 10 seconds.

IMPORTANT

The latching or non-latching configuration must be specified during order placement. It is field configurable.

Only the alarm annunciation can be configured for latching operation.

CONTINUOUS SEL TEST

During normal operation, the detector performs the Self-Test function automatically in the background once per second. During the test, detection is not interrupted and no indication is given if the test passed. f the test fails, a critical fault will occur. f degradation is present and approaching critical levels, an advisory fault will occur.

MANUAL SEL TEST

The Manual Self-Test function will immediately check the smoke chamber optics for 9egradation. nce i(litiated, there will be a one second delay before the result of the check is active. f tneJe is a failure, the LED will shut off immediately after the one second test and a critical fault will occur. f the test passes, an alarm will be annunciated while the LED remains active.

For a latching detector, the alarm will continue until power is cycled to the unit. f the test passes, but there is degradation present and approaching critical levels, an advisory fault will occur. For a non-latching detector the alarm will clear after 10 seconds.

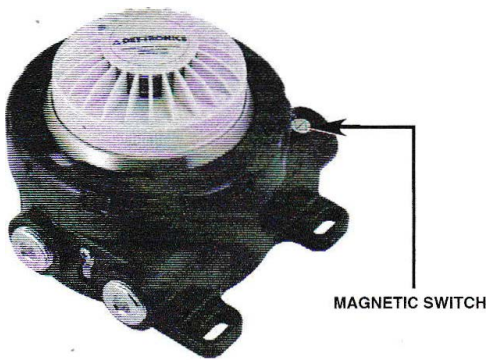

Ma netic S itc

The magnetic switch is used to initiate lhe Manual Self-Test (see Figure 3). Apply the magnet to the exterior housing and the LED will light to indicate that the magnet is detected. The LED will remain lit for at least one second during the test. After the initial delay, the test status will be indicated as described in the Manual Self-Test section.

INSTALLATION

WARNING

All entries must contain appropriately rated plugs or fittings. It is required that each plug or fitting be wrench-tightened to an appropriate installation torque and meet the minimum thread engagement requirements per the applicable local standards, codes, and practices in order to retain the defined ratings. PTFE sealant or equivalent should be used on NPT threads.

NOTE

Detector housings must be electrically connected to earth ground. Internal and external earth ground terminals are provided. For AEx (nited States one) installations the internal ground terminal shall be used for the equipment grounding connection. The external terminal can be used for supplementary bonding where local codes permit or require.

NOTE :

The EXP-SD-SFC-120V-V1 detector uses an internal Intrinsically Safe (I.S.) arrier. Proper NEC I.S. grounding must be ensured.

GREASE LUBRICATION

To ease installation and future removal, all threaded covers, stopping plugs, and thread adapters must be installed using thread lubricant. The recommended lubricant is a silicone-free grease, available from Det-Tronics.

For devices with NPT threads, Teflon tape or thread seal lubricant must be used for enhanced sealing capa bilities.

IDENTI ICATION O DETECTOR MOUNTING LOCATIONS

The most effective number and placement of detectors varies depending on the conditions on site. The individual designing the installation must often rely on, experience and sound judgment to determine the detector quantity and best locations to adequately protect the area. Note that it is typically advantageous to locate detectors where they are accessible for maintenance.

For additional information on detector location and spacing, visit the National Fire Protection Association s website (www.nfpa.org) for the NFPA Number 72, the Standard on Automatic Fire Detectors.

PROTECTION AGAINST MOISTURE DAMAGE

t is important to take proper precautions during installation to ensure that moisture will not come in contact with the electrical connections of the system. The integrity of the system regarding moisture protection must be maintained for proper operation and is the responsibility of the installer.

f conduit is used, the use of proper conduit installation techniques, breathers, glands, and seals is required to prevent waler ingress and/or maintain the explosion-proof rating.

Conduit drains must be installed at water collection points to automatically drain accumulated moisture. Conduit breathers should be installed at upper locations to provide ventilation and allow water vapor to escape. At least one breather should be used with each drain.

Conduit raceways should be inclined so that water will flow to low points for drainage and will not collect inside enclosures or on conduit seals. f this is not possible, install conduit drains above the seals to prevent the collection of water or install a drain loop below the detector with a conduit drain at the lowest point of the loop.

POWER SUPPL REQUIREMENTS

Calculate the total detection system power consumption rate in watts from cold start-up. Select a power supply with adequate capability for the calculated load. Ensure that the selected power supply provides sufficient regulated and filtered output power for the entire system. f a back-up power system is required, a float-type battery charging system is recommended. f an existing source of power is being used, verify that system requirements are met.

TRANSPORT CO ER

The Transport Cover (see Figure 4) keeps dust and particles out of the smoke chamber that may enter during transport, handling, or installation. t should remain fastened on the detector through the installation process.

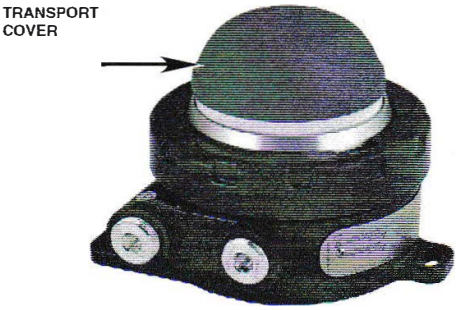

IMPORTANT

Remove the cover after installation is complete and prior to powering the detector for the first time.

MOUNTING LOCATION OPTIONS

Ceilin Mount

The EXP-SD-SFC-120V-V1 is intended for surface mounting. t is normally mounted on the ceiling no less than six inches from a side wall (See Figure 5). The exact location of the detector must be determined by an evaluation based on engineering judgement, or if possible, by field tests.

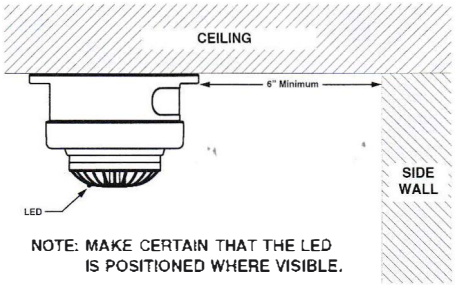

Wall Mount

The EXP-SD-SFC-120V-V1 can also be mounted on a side wall (see Figure 6). The exact location of the detector must be determined by an evaluation based on supplemented engineering judgement, or if possible, by field tests.

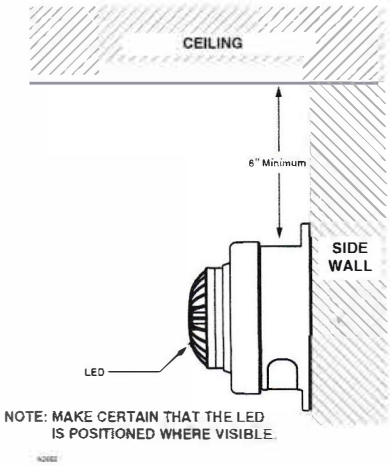

IMPORTANT

*Whenever possible, select a mounting orientation where the **LED** is visible to personnel within the area.*

MOUNT THE DETECTOR

Using three No. 8 flat head screws (or equivalent) placed through the counter bored holes in the detector flange, secure the detector junction box to the surface location.

WIRING CABLE REQUIREMENTS

Always use proper temperature rated cabling type and diameter for input power as well as output signal wiring. 14 to 18 AWG shielded stranded copper wire is recommended.

The field wiring terminal connections are certified for a single wire in size from 0.2 to 2.5 mm^2 (or two conductors with same cross section 0.2 to 0.75 mm^2). The screws must be tightened down with a torque 0.4 to 0.5 N•m. The metal housing must be electrically connected to earth ground.

A minimum of 12 Vdc must be present at the EXP-SD-SFC-120V-V1 to ensure proper operation. The maximum cable length from power source to EXP-SD-SFC-120V-V1 is 2000 feet. When the EXP-SD-SFC-120V-V1 Smoke Detector is mounted remotely using an STB termination box, maximum cable length from EXP-SD-SFC-120V-V1 to STB is 500 feet.

WARNING

For field connections, use wires/cables that are rated at 20°C greater than the maximum ambient temperature.

NOTE :

In applications where the wiringg is installed in conduit, dedicated conduit is recommended. Avoid low frequency, high voltage, and non-signaling conductors to prevent nuisance EM/ problems.

JUMPER

Depending on the wiring option that is used, jumpers may be required. See Table for the Jumper Usage Guide, and Figures 12 to 15 for wiring examples.

Jumper Usage Guide

Wiring Option	0-20 mA		Relay	
1	Used	No jumper required	Not Used	No jumper required
2	Used	No jumper required	Used	Jumper required in terminals 7 & 4 (P5)
3	Not Used	Jumper required in terminals 5 & 4 (P11)	Used	Jumper required in terminals 7 & 4 (P5)

WIRING PROCEDURE

Ensure that all cables are terminated properly. Conductor insulation should be stripped off with a bare conductor length of 0.2 inch (5 mm) minimum and 0.7 inch (18 mm) maximum. Ensure that cable shield is properly terminated and that bare shield wire is not allowed to accidentally contact the metal housing or any other wire.

Use the following instructions when wiring the EXP-SD-SFC-120V-V1 detector:

1. Slightly loosen the three setscrews located on the retaining ring

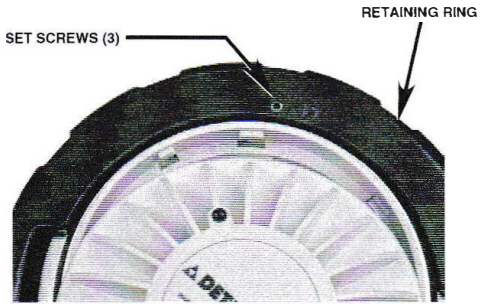

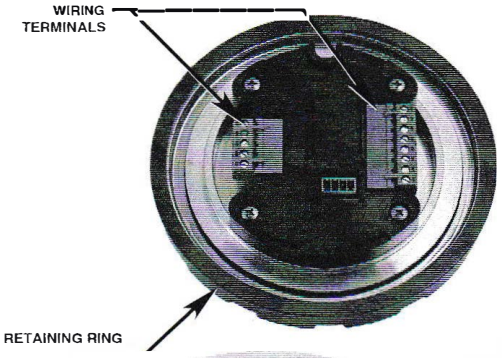

2. Unscrew the retaining ring to gain access to the wiring terminals (see Figure 8), and complete the installation of the system conduit Feed the external wiring through the remaining junction box entry or M25 to 3/4 inch adapter. When installing the junction box, use care not to damage the wires and refrain from twisting them.

3. Connect the external wiring to the appropriate terminals.
   - Figure 9 shows the wiring terminals.
   - Figure 10 shows the ground lug locations.
   - Figures 12 and 13 show wiring for single detector configurations.
   - Figures 14 and 15 show wiring for multiple detector configurations.
4. Re-install the assembly. Use the alignment guide (see Figure 11) to align the retaining ring with the junction box.
5. Screw the retaining ring on to the jurrction box and re-tighten the three setscrews.

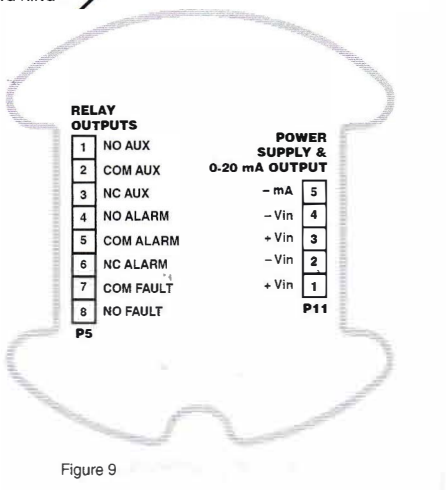

Figure 9

MAINTENANCE

WARNING

To avoid a potential electrostatic discharge (ESD), do not wipe or rub the surface of the EXP-SD-SFC-120V-V1 sensor module.

NOTE :

The EXP-SD-SFC-120V-V1 Smoke Detector contains no user serviceable components and should never be opened. The 3EXP-SD-SFC-120V-V1 wiring compartment is the only part of the smoke detector that should be opened by the user in the field.

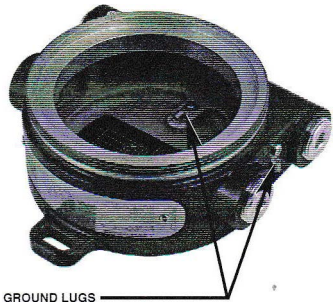

Figure 10—Ground Lug Locations

ROUTINE INSPECTION

Regularly scheduled maintenance is not required, however the EXP-SD-SFC-120V-V1 cover and smoke chamber should be inspected periodically when detectors are located in abnormally dirty or dusty environments, to ensure the smoke chamber is not blocked by dirt or debris.

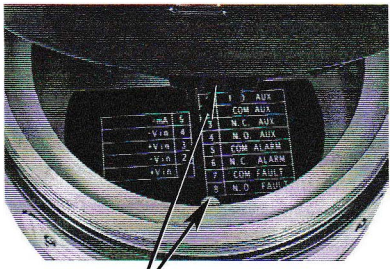

Figure 11—Alignment Guide Location

The smoke detector can be tested using the same methods employed for any photo-electric detector. Det-Tronics recommends using a test aerosol smoke dispenser for periodic maintenance of the detector.

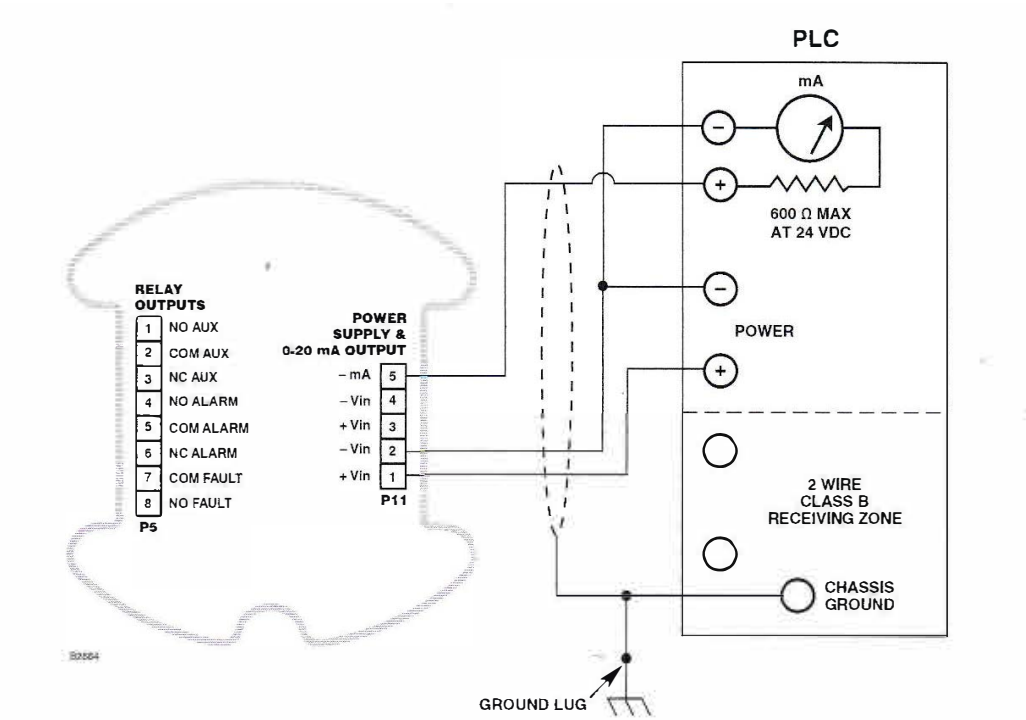

Figure 12—Single Detector Wiring (0-20 mA used, Relays not used)

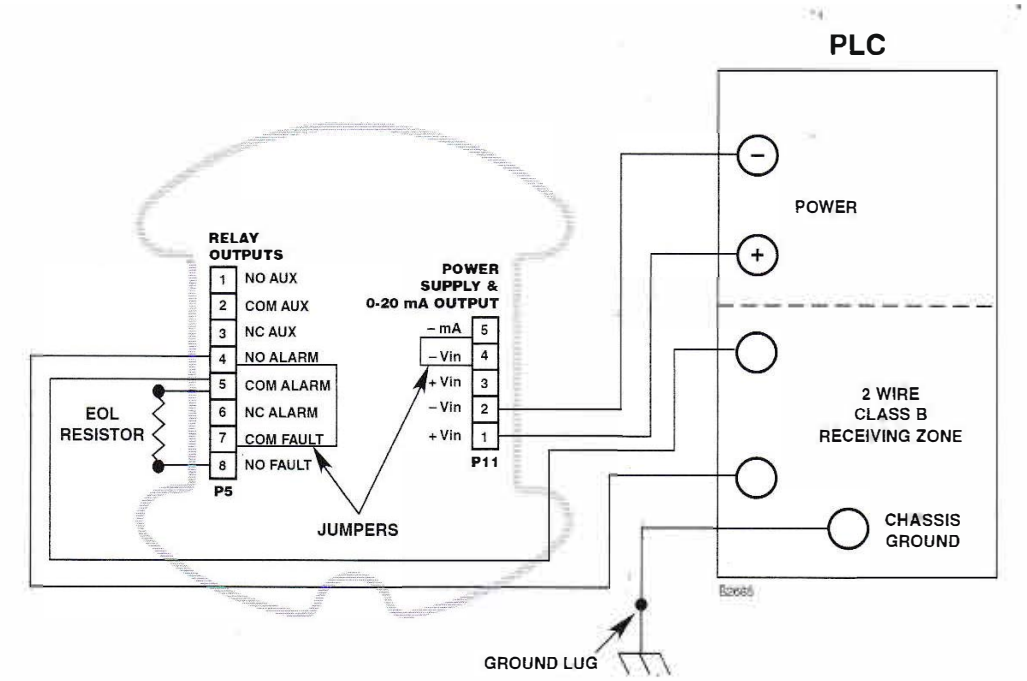

Figure 13—Single Detector Wiring (0-20 mA not used, Relays used)

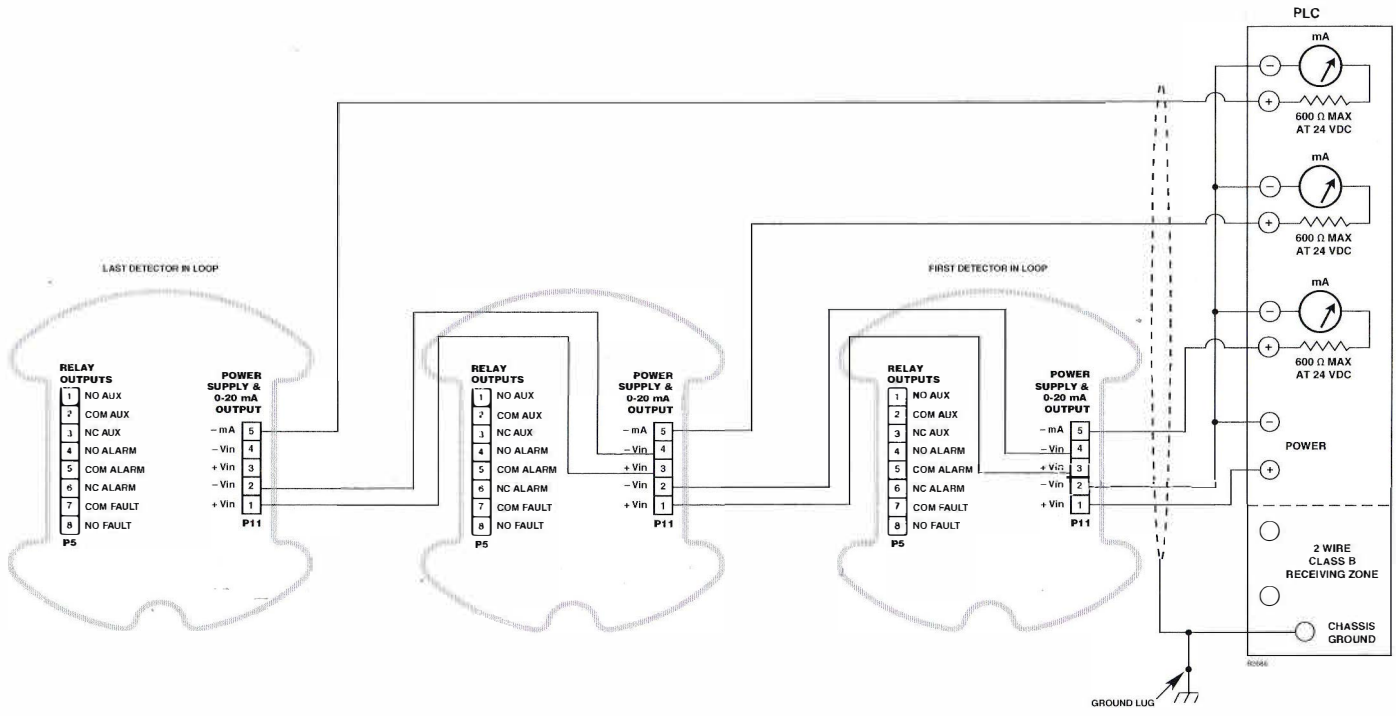

Figure 14—Multiple Detector Wiring (0-20 mA used, Relays not used)

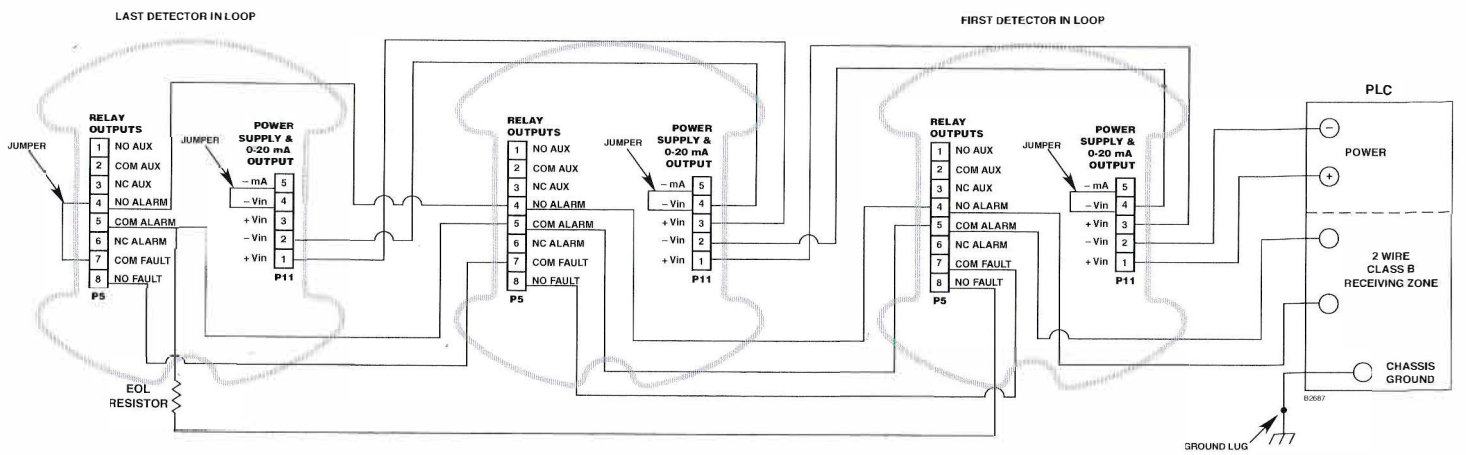

Figure 15—Multiple Detector Wiring (0-20 mA not used, Relays used)

MAINTENANCE

There are no serviceable parts inside the fixture. However, it is good practice to routinely clean and check the fixture for proper function.

- Disconnect power running to the unit and be sure the fixture is cool to the touch.
- Use a non-abrasive glass cleaning solution to clean the unit.

USE AND CARE

Unauthorized modification may impair the function and/or safety of this device and could affect the life of the equipment. Always check for damaged or worn out parts before using the device. Store it in a secure place out of the reach of children when not in use. Inspect for good working condition prior to storage and before re-use.

REPLACEMENT PARTS

The EXP-SD-SFC-120V-V1 is designed to provide years of reliable performance. Should the need for replacement parts arise, please contact Larson Electronics.

THESE INSTRUCTIONS MAY NOT COVER ALL DETAILS OR VARIATIONS OF THIS PRODUCT FOR YOUR EQUIPMENT OR INSTALLATION REQUIREMENTS. SHOULD FURTHER INFORMATION NOT COVERED BY THESE INSTRUCTIONS BE REQUIRED, PLEASE CONTACT LARSON ELECTRONICS BY EMAIL AT SALES@LARSONELECTRONICS.COM OR BY PHONE AT 1-800-369-6671 FOR FURTHER ASSISTANCE.

PLEASE VISIT LARSONELECTRONICS.COM FOR **WARRANTY** AND **RETURN** INFORMATION.