HAL-TRN SERIES 250/400W

CAUTION: FOR PROPER AND SAFE INSTALLATION OF THIS PRODUCT, READ THE FOLLOWING INSTRUCTIONS.

Integrally ballasted floodlights for mogul based 400W, 250W, 150W, 100W or 70W high pressure sodium lamps; 400W, 250W or 175W metal halide lamps; 400W, 320W, 250W or 200W pulse start metal halide lamps; or 400W, 250W or 175W mercury vapor lamps. For general, marine and Class I, Div. 2, Groups A, B, C and D hazardous locations.

MARINE AND HAZARDOUS LOCATIONS:
Suitable for use in areas rated Class I, Division 2, Groups A, B, C and D.

•Wiring methods must comply with Class I, Division 2 requirements as stated in the National Electrical Code or other applicable local codes and standards.

•The proper nameplate located on the outside back of luminaire will carry the appropriate ratings based on the luminaire catalog number.

•Where flexible cord is used it should be approved for extra hard wet location usage, and shall have a separate grounding conductor.

•Cord should have a diameter between 0.5" and 0.625" to fit the grommet properly; when tightened this will form a weatherproof seal and strain relief as required (see figure 1).

NOTE: DO NOT USE ON UNGROUND 480V CIRCUITS.

CAUTION: Depending on the specified catalog number, this luminaire is designed for permanent installation in ordinary, hazardous or marine locations.

DO NOT USE IN AREAS OF LIMITED VENTILATION OR IN HIGH AMBIENT ENCLOSURES.

The lamp and luminaire operate at high temperatures, contact with combustible material can cause fire and personal contact can cause severe burns.

WARNING: Risk of Electric Shock!
1. Due to high temperature inside of luminaire, use provided sleeving over supply leads (see figure 1).
2. For pole mounting, make incoming supply wire connections inside of the fitter only. See instruction on back.

LAMP INSTALLATION:
Open HAL-TRN luminaire by loosening 4 captive screws and allow the cover to swing down. Install proper lamp. Retighten all screws securely to maintain waterproof seal.

AUXILIARY LIGHT:
For HAL-TRN luminaire equipped with an auxiliary light, see auxiliary lamp label on door for lamp type and maximum wattage information. The auxiliary lamp circuit is factory prewired.

HOT RESTART:
•Units equipped with a Hot Restrike Ignitor will restart lamp after a temporary lamp outage. An end of life lamp that does not start will cause the ignitor to de-energize the luminaire.
•After relamping, the power to the luminaire must be shut off to allow the ignitor to reset.

MOUNTING:
A. TRUNNION - HAL-TRN luminaire provided with a trunnion will mount directly on flat surfaces. The trunnion has a center clearance hole for 1/2" bolt and two 1/2" clearance holes spaced 3-1/2" apart on trunnion center line.
•Trunnion equipped:
Slightly loosen (4) trunnion bolts (figure 1). Support and tilt floodlight to desired position with free hand. Retighten bolts.

FIGURE 1

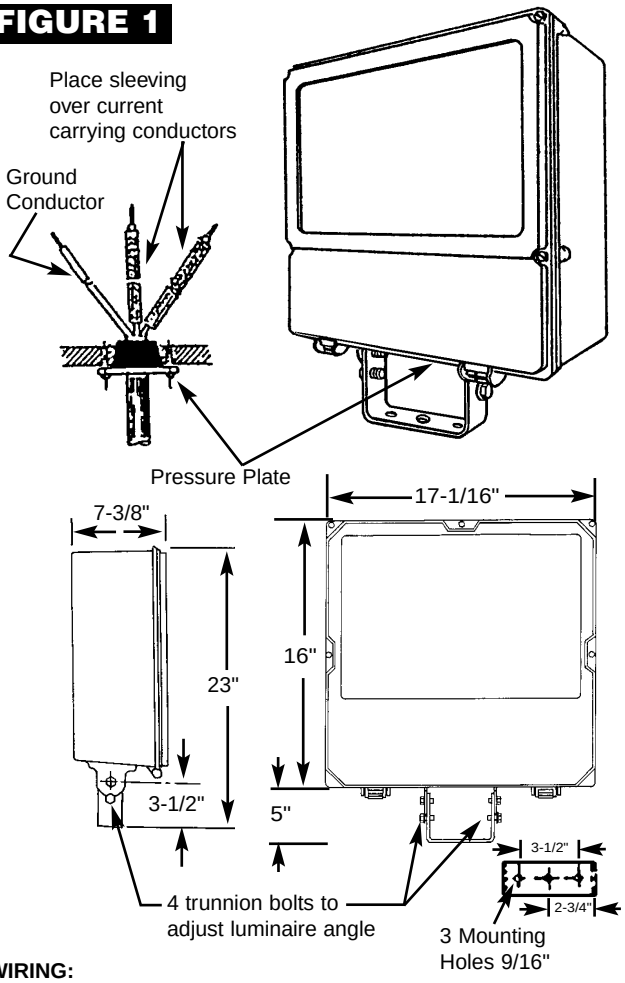

WIRING:
HAL-TRN luminaire with Trunnion: For making electrical connections to this unit a three conductor No. 16 AWG cable is recommended (14 AWG for 1500 watt).

•Open HAL-TRN luminaire by loosening 4 captive screws and allow the cover to swing down. Remove the three cover screws covering the ballast compartment. Strip cable outer jacket 6 inches. Insert cable through grommet and retighten the pressure plate screws. The grommet and pressure plate must be properly tightened to form a weatherproof seal and strain relief.

•Place the woven glass sleeving provided over the individual current carrying supply conductors (see figure 1).

•Select the proper ballast voltage lead and splice to line lead (See multi-tap ballast caution label). Splice ballast common to line neutral. Splice floodlight ground green lead to line ground.

MOUNTING INSTRUCTIONS: (see figure 3)
Mount luminaire trunnion to Yoke mount bracket with 2-1/2" bolts & 2-1/2" lockwashers supplied with bracket. Mount yoke bracket with 1-3/4" bolt (supplied by others). Yoke mount may be locked in position with 1-3/8" bolt (supplied by others).

MOUNTING INSTRUCTIONS: (see figure 4)
Mount wall or clamp mounting bracket to pole with U bolt and nuts supplied with bracket in desired position on pole. Tighten nuts to secure in position. Mount luminaire with trunnion & yoke mounting brackets already installed, to wall or clamp mounting bracket with 1-5/8" bolt (supplied by others). Install 1-3/8" bolt (supplied by others) thru yoke mounting bracket and into wall or clamp mounting bracket. Tighten bolt after aiming luminaire in desired direction to lock in place.

POLE MOUNT BRACKET: (see figure 5)
NOTE: Flexible cord or cable shall be for extra hard wet locations usage and have a temperature rating as indicated on the luminaire nameplate. Cord should have a diameter between 0.5" and 0.625" (13mm - 16mm). Cords outside of this range may prevent the proper functioning of the clamp and result in water ingress.
1. Loosen two screws on pressure plate for cable entrance.
2. Feed pole and bracket cable through cable entrance (#16 AWG (1.5mm) cable recommended).
   •Leave at least 10" (254 mm) of slack to make connections inside luminaires.
   •Tighten pressure plate.
3. Mount pole mount bracket onto pole and tighten mounting bolts.
4. Remove 2-luminaire mounting bolt(s).
   •Mount luminaire to pole mount bracket and secure mounting bolt(s) tightly.

CAUTION: Luminaire with optional photocontrol or quartz auxiliary lamp does not comply with UL requirements for use in classified locations.

FIGURE 2

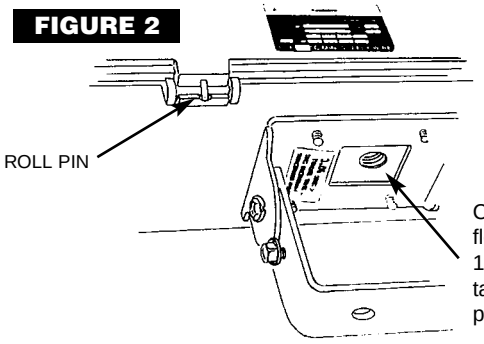

FIGURE 3

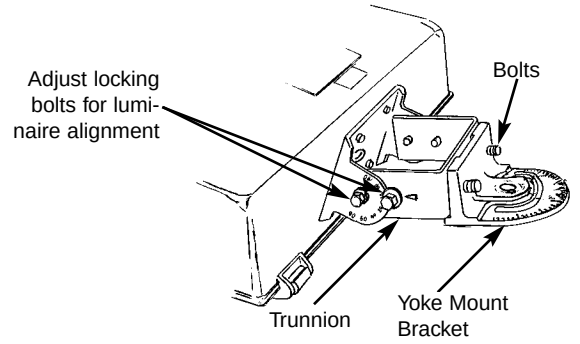

FIGURE 4

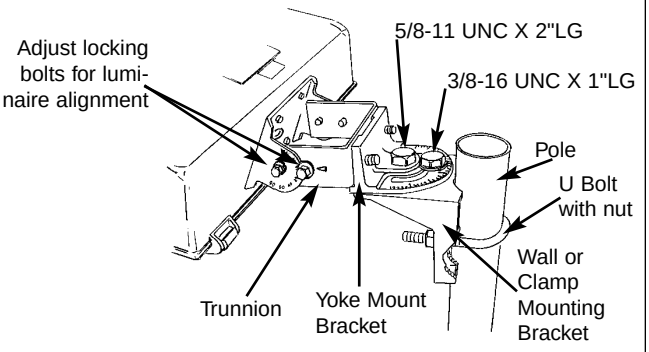

FIGURE 5 **INSTRUCTIONS FOR POLE MOUNT BRACKET**

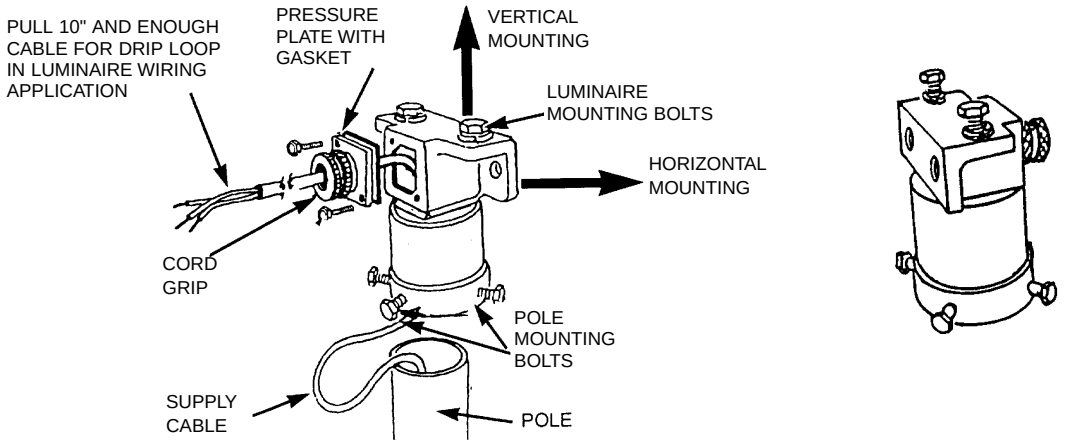

Larson Electronics, LLC • 9419 US-HWY 175 • Kemp, TX 75143

WIRING:
HAL-TRN luminaire with Slipfitter: All 480 volt models are internally prewired. Models with multi-tap ballasts require connecting the black slipfitter lead to the ballast.

• Open HAL-TRN luminaire by loosening 4 captive screws and allow the cover to swing down. Remove the three cover screws covering the ballast compartment. Select the multi-tap ballast primary lead of the proper voltage and splice to the black slipfitter lead (see multi-tap caution label on ballast).

• Open slipfitter wiring compartment by loosening 2 screws and removing compartment cover. Connect slipfitter leads to voltage, neutral, and ground supply cable conductors.

FIGURE 7

Slipfitter Mount

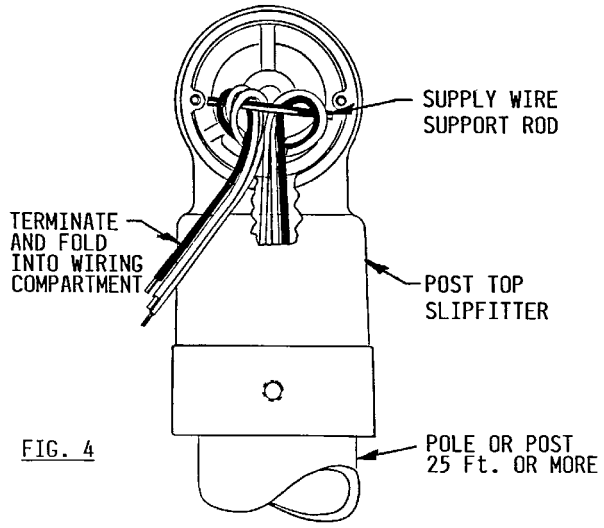

NOTE:
If post of pole is 25 ft. or higher, the power supply conductor lines must be supported.

• Loop the power supply lines around the support rod as shown in Figure 7. Pull line to reduce the size of knot and insert in the wiring compartment as shown.

• The weight of the supply wire will hold the rod in place.

• Complete the wiring.

FIGURE 6

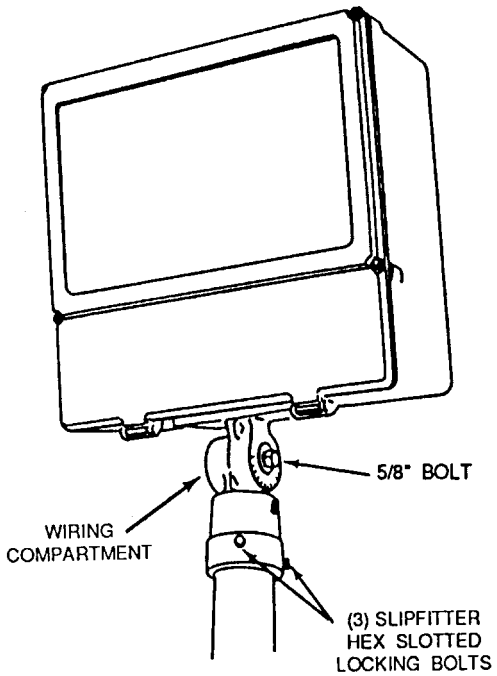

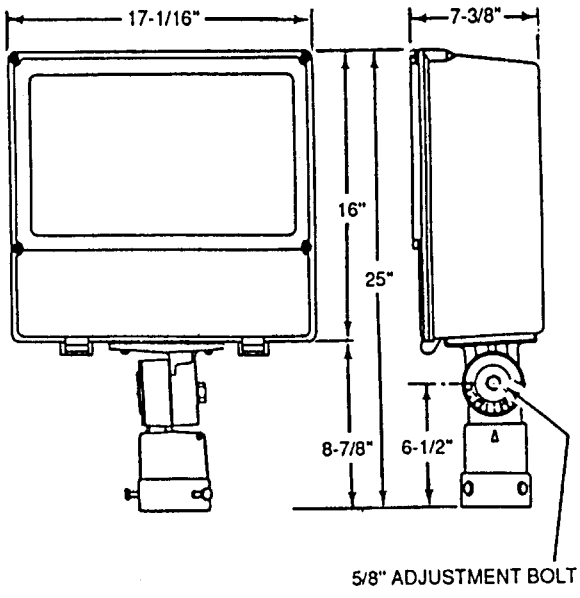

NOTE: Do Not use on ungrounded 480V circuits.