Operating instructions

EN



Linear Luminaire for Fluorescent Lamps

Series ATEX-HALP

LARSON ELECTRONICS®

EN

Contents

1 General Information 2
1.1 Manufacturer 2
1.2 Information regarding the operating instructions 3
1.3 Conformity with standards and regulations 3
2 Explanation of the symbols 3
2.1 Symbols in these operating instructions 3
2.2 Warning notes 3
2.3 Symbols on the device 4
3 Safety notes 4
3.1 Operating instructions storage 4
3.2 Safe use 4
3.3 Intended Use 5
3.4 Modifications and alterations 5
4 Function and device design 5
4.1 Function 5
4.2 Device design 6
5 Technical data 6
6 Transport and storage 10
7 Mounting and installation 10
7.1 Dimensions / fastening dimensions 10
7.2 Mounting / dismounting, operating position 12
7.3 Installation 16
8 Commissioning 19
9 Operation 19
9.1 Troubleshooting 19
10 Maintenance and repair 20
10.1 Maintenance 20
10.2 Returning the device 22
11 Disposal 22
12 Accessories and Spare parts 22

1 General Information

1.1 Manufacturer

Larson Electronics
9419 US-HWY 175
Kemp, TX 75143

Phone: 877-348-9680
Fax: 903-498-3364
Internet: www.larsonelectronics.com
E-mail: sales@larsonelectronics.com

1.2 Information regarding the operating instructions

ID-No.: 180809 / ATEX-HALP

The original instructions are the English edition.

1.3 Conformity with standards and regulations

See certificates and EC Declaration of Conformity.
The device has IECEx approval. See IECEx homepage:
http://iecex.iec.ch/
Further national certificates can be downloaded via the following link:
https://www.larsonelectronics.com under part number.

2 Explanation of the symbols

2.1 Symbols in these operating instructions

Symbol	Meaning
	Tips and recommendations on the use of the device
	General danger
	Danger due to explosive atmosphere
	Danger due to energised parts

2.2 Warning notes

Warning notes must be observed under all circumstances, in order to minimize the risk due to construction and operation. The warning notes have the following structure:

- Signalling word: DANGER, WARNING, CAUTION, NOTICE
- Type and source of danger/damage
- Consequences of danger
- Taking countermeasures to avoid the danger/damage

EN

	**DANGER** Danger to persons Non-compliance with the instruction results in severe or fatal injuries to persons.
	**WARNING** Danger to persons Non-compliance with the instruction can result in severe or fatal injuries to persons.
	**CAUTION** Danger to persons Non-compliance with the instruction can result in light injuries to persons.
	NOTICE Avoiding material damage Non-compliance with the instruction can result in material damage to the device and / or its environment.

2.3 Symbols on the device

Symbol	Meaning
CE	CE marking according to the currently applicable directive.
	According to marking, device approved for hazardous areas.

3 Safety notes

3.1 Operating instructions storage

- Read the operating instructions carefully and store them at the mounting location of the device.
- Observe applicable documents and operating instructions of the devices to be connected.

3.2 Safe use

- Read and observe the safety notes in these operating instructions!
- Observe characteristic values and rated operating conditions on the rating and data plates!
- Observe additional information plates on the device!
- Use the device in accordance with its intended and approved purpose only!
- We cannot be held liable for damage caused by incorrect or unauthorized use or by non-compliance with these operating instructions.
- Before installation and commissioning, make sure that the device is not damaged!
- Work on the device (installation, maintenance, overhaul, repair) may only be carried out by appropriately authorized and trained personnel.

3.3 Intended Use

The luminaire is equipment

- for lighting areas, work spaces and objects
- can be used indoors and outdoors
- for stationary mounting
- for use in Zones 1, 21, 2, 22 and in the safe area

3.4 Modifications and alterations

	**DANGER**
	Explosion hazard due to modifications and alterations to the device! Non-compliance results in severe or fatal injuries. • Do not modify or alter the device. No liability or warranty for damage resulting from modifications and alterations.

4 Function and device design

	**DANGER**
	Explosion hazard due to improper use! Non-compliance results in severe or fatal injuries. • Use the device only according to the operating conditions described in these operating instructions.

4.1 Function

	**DANGER**
	Explosion hazard due to improper use! Non-compliance results in severe or fatal injuries. • Use the device only according to the operating conditions described in these operating instructions.

- for lighting areas, work spaces and objects
- switching off the equipment by means of a central lock (standard version) when the luminaire is opened

EN

4.2 Device design

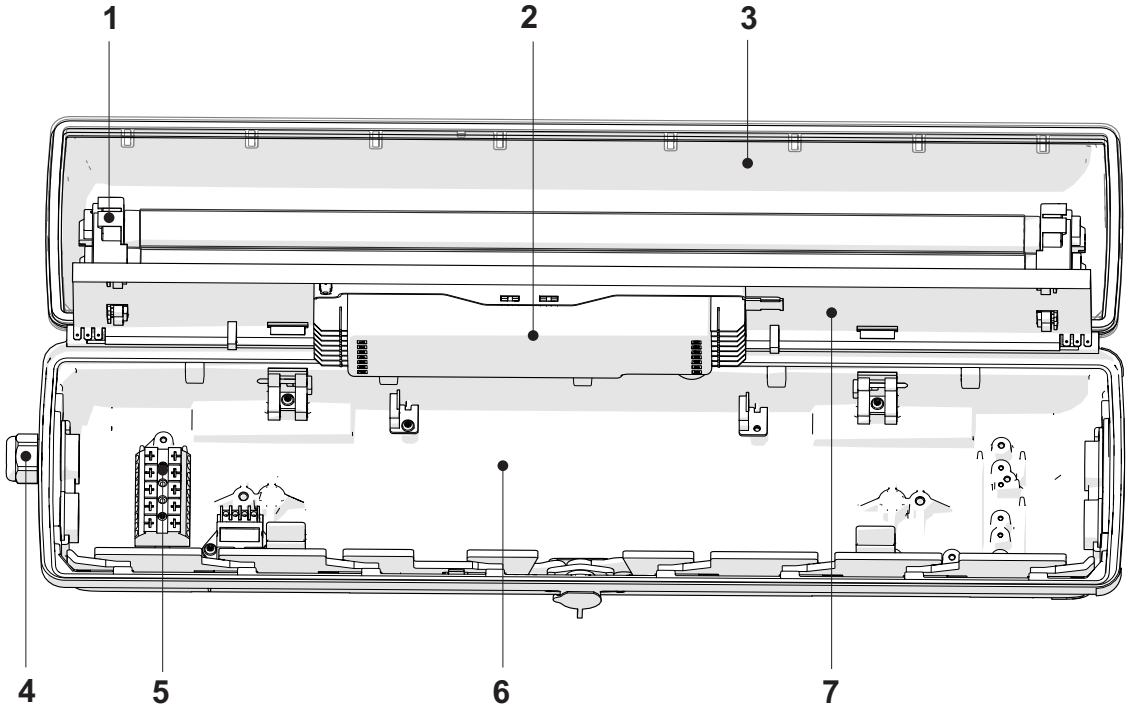

1 - Lamp holder

2 - Ballast

3 - Translucent cover

4 - Cable gland

5 - Connection terminal (left standard, right with through wiring)

6 - Luminaire enclosure

7 - Reflector plate

5 Technical data

Technical Data	
Explosion protection	
Global (IECEx)	
Gas and dust	IECEx PTB 13.0003
	Ex db eb IIC T4 Gb
	Ex tb IIIC T80°C Db
Europe (ATEX)	
Gas and dust	PTB 13 ATEX 2004
	⟨Ex⟩ II 2 G Ex db eb IIC T4 Gb
	⟨Ex⟩ II 2 D Ex tb IIIC T80°C Db
Certifications and certificates	
Certificates	IECEx, ATEX, Brazil (INMETRO), Kazakhstan (TR), Russia (TR), Serbia (SRPS), Belarus (TR)

EN

Technical Data

Electrical data		
Ballast		
	Lamp start	Cold start
	Voltage	220 ... 240 V AC
	Voltage DC during switching on	198 … 264 V DC
	Voltage DC during operation	176 … 264 V DC
	Frequency	0 / 50 … 60 Hz
	Operation of the lamps DC	1 lamp
	Lamp standard	IEC 60081
	Lamp power	18, 36, 58 W
	Nominal current	1 x 18 W, 85 mA 2 x 18 W, 170 mA 1 x 36 W, 160 mA 2 x 36 W, 320 mA 1 x 58 W, 250 mA 2 x 58 W, 500 mA
Power factor cos φ	cos φ ≥ 0.97 capacitive; no additional compensation required	

EN

Technical Data

Disconnection of the light	**When opening the light** Switch with safety lock; when opening the central lock, all poles of the voltage supply to the ballast are disconnected; contacts of the switching element are NC contacts, they can only be switched on again when the lamp cover and the central locking system are closed. **In case of a lamp fault**, the electronic ballast disconnects the defective lamp from the power supply.
Luminous characteristics	
Measures for light guidance	**Standard:** Deep bowl, reflector of the lamp is white Lateral dazzle limitation in the lamp cover
Ambient conditions	
Operating temperature range	Through wiring Type / without / with ATEX-HALP... / -30 ... +55 °C / -30 ... +50 °C The lowest ambient temperature when used with breather is -20 °C.
Mechanical data	
Degree of protection	IP66 / IP67 (IEC 60598)
Protection class	I (with internal PE connection)
Impact strength (IK code)	IK10 (IEC 62262)
Material	
Enclosure	
Enclosure	Polyester resin, glass fibre-reinforced
Colour	color grey.
Translucent cover	Polycarbonate
Seal	Silicone foam gasket in the lamp cover
Luminaire locking	Central locking which can be opened/closed using a socket key M8 / wrench size 13, hinged lamp cover

EN

Technical Data

Montage / Installation

Cable glands

Standard luminaire

Plastic: 2 x M25 x 1.5 cable gland 8161 and
1 x M25 x 1.5 stopping plugs 8290 (enclosed)

Metal: 2 x metal plates M20 x 1.5 connected by means of PE for metal cable entries
Attention: cable entries must be ordered separately

Special: max. 4 bores for M20, M25, NPSM ½''
max. 2 bores for NPT ¾''

Metal cable glands: M20 x 1.5, M25 x 1.5; earthing of the metal cable entries by means of metal plates

Connection

Standard: Spring clamp terminals
5-pole: L1, L2, L3, N, PE
Clamping range: 1 x 0.75 ... 4 mm^2 (solid / finely stranded)
4 mm^2 finely stranded without core end sleeve only
(2 free clamping units for each pole available)

Special: Terminal block with covering
5-pole: L1, L2, L3, N, PE
Clamping range:
2 x 1.5 ... 6 mm^2 (solid);
2 x 1.5 ... 4 mm^2 (finely and extra finely stranded)

Through wiring

Through wiring **Standard luminaire**
Luminaires are equipped with internal through wiring. Ingoing and outgoing leads can be connected on the opposite sides.
Terminals: see Techn. data
Wiring cross-section: 2.5 mm^2 for max. 16 A

without **Optional**
On the connection side, there are 2 bores M25 x 1.5 for cable entries for ingoing and outgoing wiring of the connection line
(ingoing and outgoing leads on one side).

Assembly

For outdoor mounting, a breather is recommended

Standard luminaire

Standard: 2 x M8 insert nuts in the enclosure

Special: Mounting grooves in the enclosure for the use of fastening and ceiling rails for variable luminaire mounting (variable mounting distances for luminaires 18 W: 320 ... 480 mm;
36 W / 58 W: 670 ... 930 mm)

EN

6 Transport and storage

- Transport and store the device only in the original packaging.
- Store the device in a dry place (no condensation) and vibration-free.
- Do not drop the device.

7 Mounting and installation

	DANGER
	Explosion hazard due to incorrect installation of the device! Non-compliance results in severe or fatal injuries. • Carry out installation strictly according to the instructions and national safety and accident prevention regulations to maintain the explosion protection. • Select and install the electrical device so that explosion protection is not affected due to external influences, i.e. pressure conditions, chemical, mechanical, thermal and electric impact such as vibration, humidity and corrosion (see IEC/EN 60079-14). • The device must only be installed by trained qualified personnel who is familiar with the relevant standards.

7.1 Dimensions / fastening dimensions

Dimensional Drawings (All Dimensions in mm [inches]) - Subject to Alterations

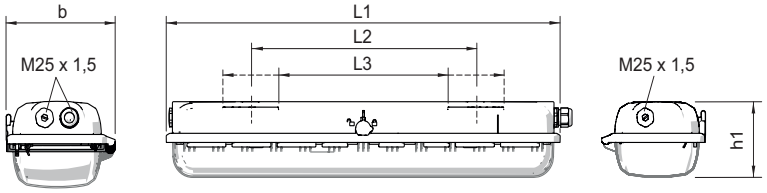

Dimensions	Luminaire		
	17/18 W	32/36 W	40/58 W
L1	700 [27.56]	1310 [51.57]	1610 [63.39]
L2 [1)]	400 [15.75]	800 [31.50]	800 [31.50]
L3 [2)]	320 ... 480 [12.60 ... 18.90]	670 ... 930 [26.38 ... 36.61]	670 ... 930 [26.38 ... 36.61]
b	184 [7.24]	184 [7.24]	184 [7.24]
h1	125 [4.92]	125 [4.92]	125 [4.92]

[1)] fixed mounting distance

[2)] variable mounting distance

EN

Dimensional Drawings for Assembly Parts and Accessories

(All Dimensions in mm [inches]) - Subject to Alterations

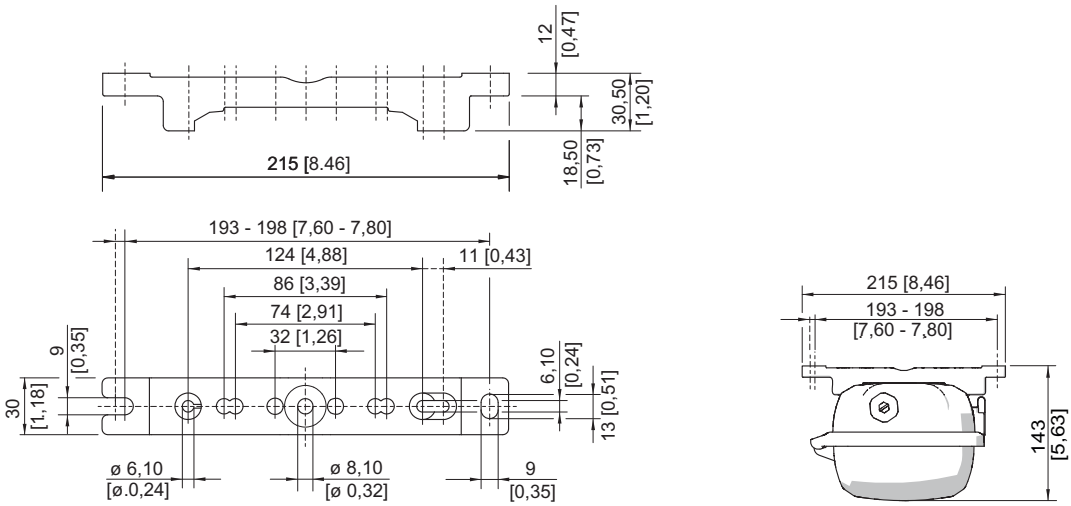

Mounting rail

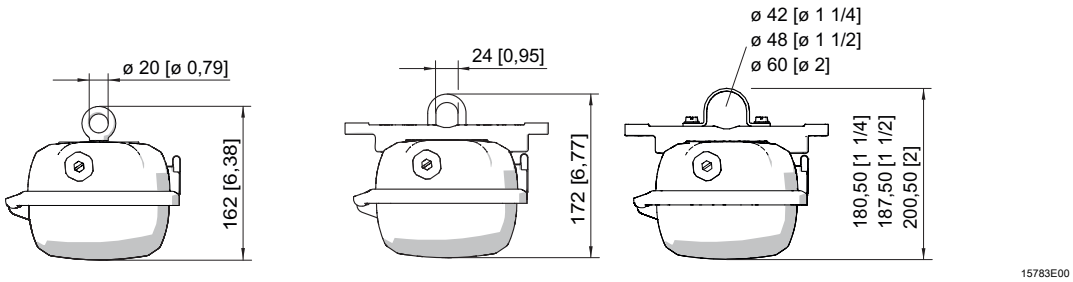

Ring bolt fitted in insert nut of the luminaire

Mounting bracket fitted in mounting rail

Pipe clamp fitted in mounting rail

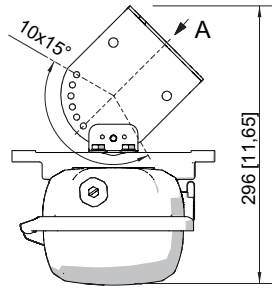

A

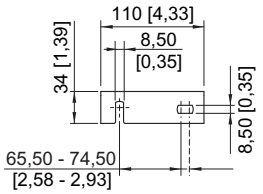

Wall mounting bracket fitted in mounting rail

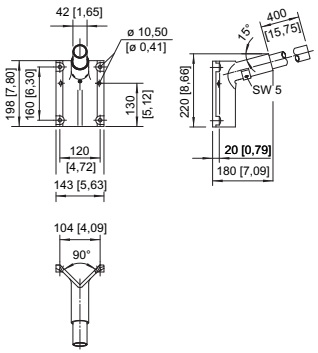

Bracket for wall mounting with pipe section

EN

Dimensional Drawings for Assembly Parts and Accessories
(All Dimensions in mm [inches]) - Subject to Alterations

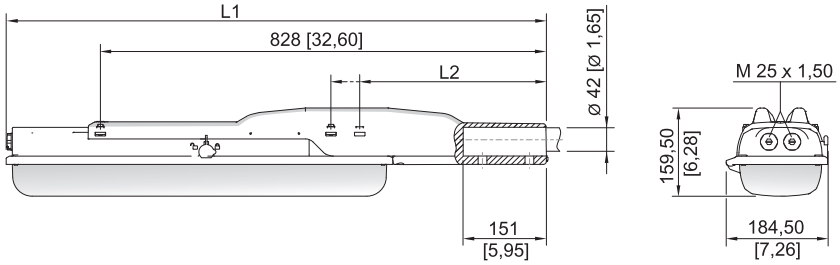

Dimension	Light	
	17/18 W	32/36 W
L1	978 [38.50]	1587 [62.48]
L2	390 [15.35]	338 [13.31]

ATEX-HALP with pole mounting sleeve

7.2 Mounting / dismounting, operating position

	DANGER
	Explosion hazard due to electrostatic discharge Non-complicance results in severe or fatal injuries. Do not use the luminaire in strong charge generating environments! The following processes/activities should be avoided: • accidental friction • particle currents

	The luminaire is suitable for wall and ceiling mounting. Wall mounting must be performed with the central lock directed downwards. The mounting position with light emission upwards is not allowed when mounted outdoors.

	For outdoor use, we recommend to install a breather. The breather guarantees compliance with degree of protection IP64 in all mounting positions.

EN

DANGER

Explosion hazard due to inadmissible heating!
Non-compliance results in severe or fatal injuries.

- Avoid external heat sources and/or direct sunlight (risk of change of temperature class or change of maximum permissible surface temperature).
- Do not exceed the maximum ambient temperature due to external heat sources (premature failure of equipment).

Suspension at fixed mounting points

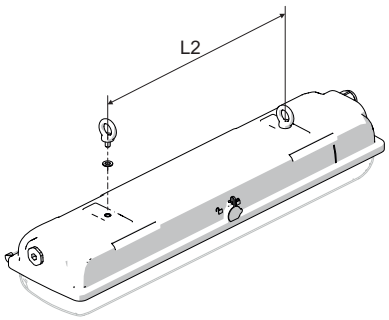

Version	L2 [mm]
17/18 W	400
32/36 W	800
40/58 W	

max. screw-in depth 10 mm

Suspension at moveable assembly parts

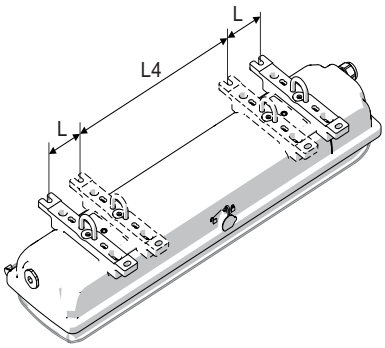

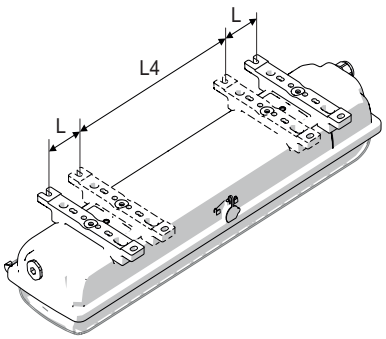

Mounting bracket Top rail

Version	L4 [mm]	L [mm]
17/18 W	320	80
32/36 W	670	130
40/58 W		

Lateral mounting pockets for variable suspension points.

When mounting the luminaire using top rails, ensure that the mounting surface is flat. Otherwise, the enclosure might be mounted in a warped/twisted way. The result is leakage of the luminaire and difficulties in replacing the translucent cover.

EN

Pole mounting
Pole mounting using pipe clamps

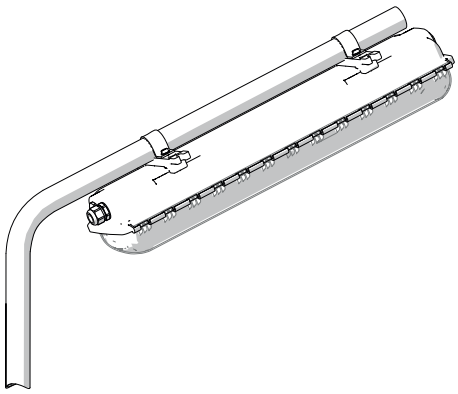

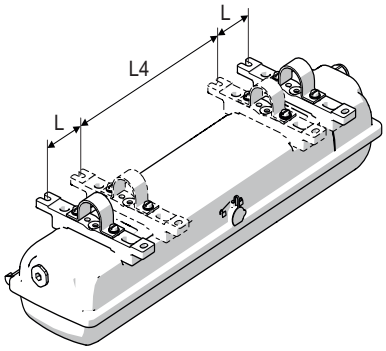

Version	L4 [mm]	L [mm]
17/18 W	320	80
32/36 W	670	130
40/58 W		

i	For pipe clamp mounting, use integrated mounting rail providing reliable and stable four-point fixing! In case of point suspension using pipe clamps, Larson Electronics does not guarantee the strength and tightness of the luminaire!

Pole mounting using pole mounting sleeve

i	Only for luminaires length 700 mm and 1310 mm.

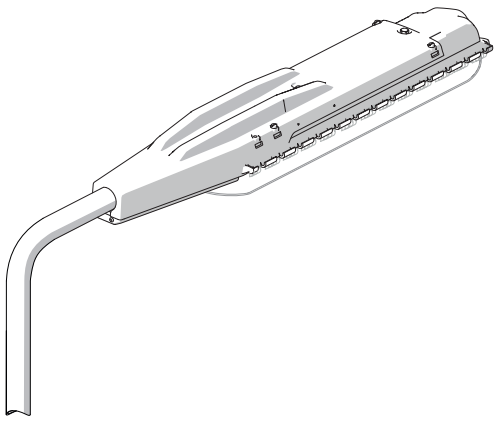

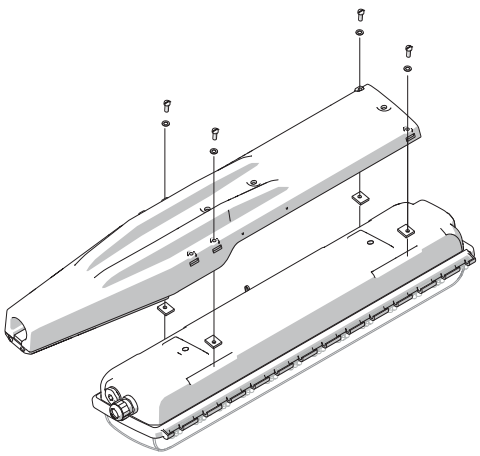

EN

Wall bracket mounting

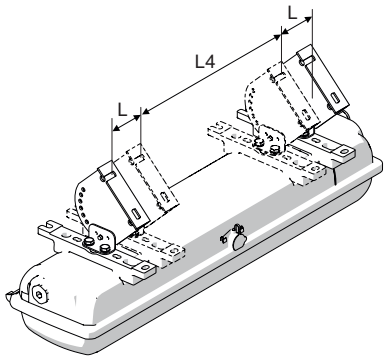

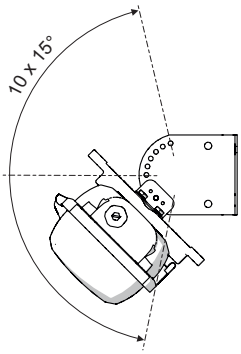

Version	L4 [mm]	L [mm]
17/18 W	320	80
32/36 W	670	130
40/58 W		

Continuous row mounting

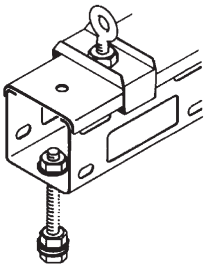

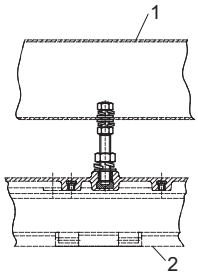

1: Rail profile
2: Luminaire

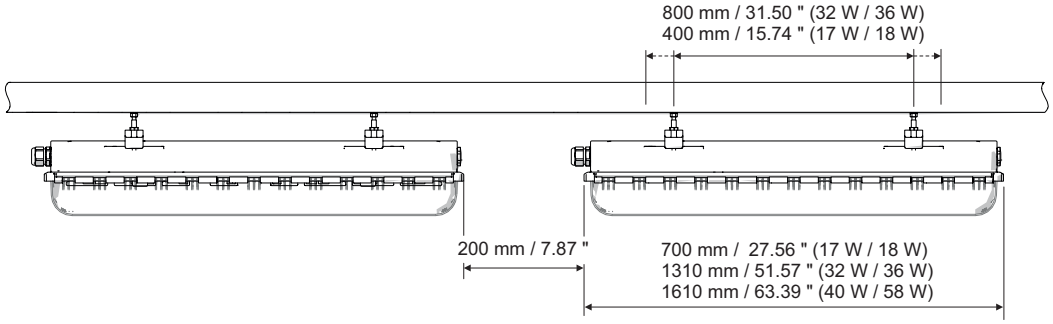

Rail profile for continuous row mounting of the linear fluorescent luminaires EXLUX

It facilitates the row mounting and installing of luminaires.
The rail profile can be also used as cable duct.
Always use mounting rails for mounting to adjust the luminaires to the hole matrix of the rail profile.

EN

7.3 Installation

7.3.1 Opening and Closing of the Enclosure

	DANGER
	Risk of electric shock! Risk of fatal injuries! • Luminaires without switch must not be opened when they are supplied with power (see information plate on the lock)!

	Recommendation Opening and closing of the luminaire by using a socket wrench.

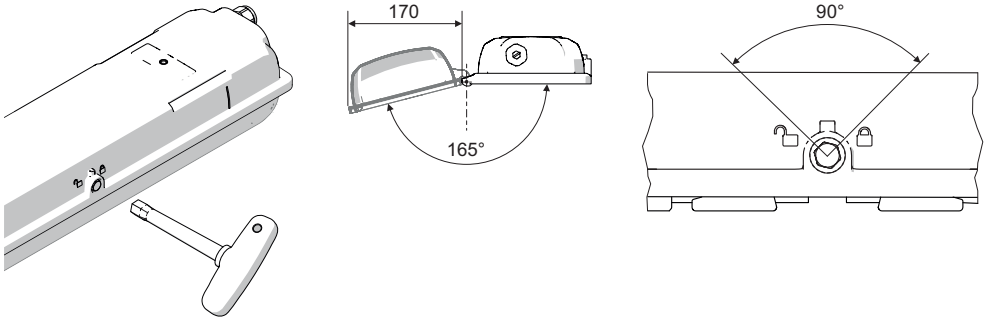

- Remove the closing cap of the central lock.
- Turn the central lock using a socket wrench M8, wrench size 13, by 90° to the left as far as it will go.
- Swivel down the translucent cover.
- Proceed in reverse order to close.
- The seal of the translucent cover must lie correctly on the sealing edge.
- Push the closing cap onto the central lock opening (dust protection).

Note:
- Version without switch: Disconnect the luminaire from the power supply and secure it against being switched on again.
- Version with switch: The luminaire is positively disconnected from the power supply by actuating the central lock.
- In open end position and with translucent cover swivelled down, a restart lock-out device prevents the central lock from being actuated.

Please do not use force!
When the translucent cover is closed, the central lock is released.

EN

Opening and closing the reflector plate

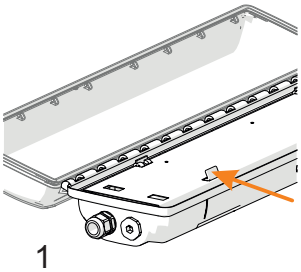
1

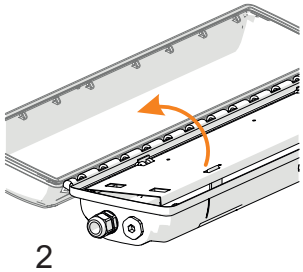
2

1 Open the reflector plate by pressing the safety latch.
2 Swivel down the reflector plate.

- When closing, flip up the reflector plate and snap it into place.

7.3.2 Electrical connections

Electrical connection

Observe the maximum clamping possibility of the connecting terminals (see chapter "Technical data").
For optional screw-type terminals, two conductors per clamping unit can be clamped (ingoing and outgoing wiring).

Note:

- Clamping must be carried out precisely!
- Do not clamp any part of the conductor insulation!
- Do not interchange the conductors!
- Observe the technical regulations when connecting the conductor!
- Clamp the conductor firmly.
- The terminal cover of optional screw-type terminals does not have to be removed to clamp the conductor!
- Optional screw-type terminals: Firmly tighten screws (tightening torque 2 Nm, for unused clamping units 0.7 Nm)!

Connection terminals

Standard:	**Optional:**
Spring clamp terminals up to 4 mm^2	Screw-type terminals up to 4 mm^2 finely and extra finely stranded, and 6 mm^2 solid
Stripping length: 10 ... 11 mm	Stripping length: 10 ... 11 mm

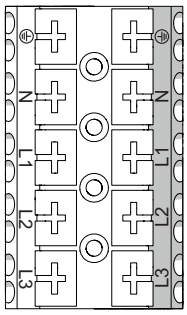

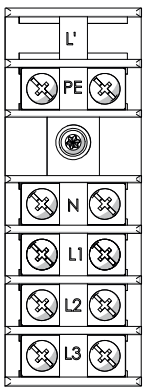

L1, L2, L3 = Phase
N = Neutral conductor
PE = Protective conductor

EN

Through wiring

NOTE
Through wiring with 2.5 mm ^{2} cross-section for max. 16 A.

7.3.3 Cable entries

The standard luminaire is delivered with 3 lead-in holes, 2 cable glands and 2 stopping plug.
Please observe the tightening torque for luminaires with installed cable glands and stopping plugs.

	Tightening torque	
	Connection thread	Pressure screw
Cable gland 8161		
M20 x 1.5	2.3 Nm	1.5 Nm
M25 x 1.5	3.0 Nm	2.0 Nm
Stopping plugs 8290		
M20 x 1.5	1.0 Nm	
M25 x 1.5	1.5 Nm	

Luminaires with approved cable glands and stopping plugs; not supplied by Larson Electronics.

	WARNING
	Cable glands and stopping plugs which are not approved. Explosion protection is impaired! • Only use separately certified cable glands and stopping plugs.

Please note:

- the required dust resistance!
- the required type of protection!
- the required temperature resistance!
- the IP degree of protection according to the rating plate!
- the operating instructions of the cable glands and stopping plugs!
- the required tightening torques!
- the range of the permissible cable diameter!

EN

8 Commissioning



DANGER

Explosion hazard due to incorrect installation!
Non-compliance results in severe or fatal injuries.
- Check the device for proper installation and function before commissioning.
- Comply with the national regulations.

Before commissioning, ensure that
- the device has been installed according to regulations.
- the power supply voltage and the rated operational voltage are identical.
- the required cable diameter for cable glands has been used.
- the cable entries and stopping plugs have been securely tightened.
- the cables are correctly connected.
- the connection has been performed correctly.
- all screws and nuts are tightened according to regulations.
- the connection chamber is clean.
- the device is not damaged.
- no foreign bodies are inside the device.
- the device is sealed according to regulations.

NOTE

Condensation
due to specific environmental and operating conditions condensation cannot be avoided completely.
- operate the luminaire continuously or periodically over extended periods of time!
- avoid thermal bridges!

9 Operation

9.1 Troubleshooting

Cause	Measure
The lamp was incorrectly inserted.	Insert the lamp correctly.
The lamp is defective.	Replace the lamp.
The ballast is defective.	Replace the ballast.
The switch is defective.	Replace the switch.
The lamp reached its end of service life.	Replace the lamp.

If the error cannot be eliminated using the mentioned procedures:

For fast processing, have the following information ready:
- Type and serial number
- Purchase information
- Error description
- Intended use (in particular input / output wiring)

EN

10 Maintenance and repair



WARNING

Risk of electric shock or malfunctioning of the device due to unauthorized work!
Non-compliance can result in severe injuries and material damage.

- Work performed on the device must only be carried out by appropriately authorized and qualified electricians.

10.1 Maintenance



Observe the relevant national regulations in the country of use.

- Determine the type and extent of inspections in compliance with the relevant national regulations.
- Adapt inspection intervals to the operating conditions.

The following tests and measures must be carried out during regular maintenance.

Check	Measures
the permissible ambient temperature	If exceeding the permissible ambient temperature or falling below the device must be taken out of operation.
the enclosure components for formation of cracks and damage.	Replace the exchangeable enclosure components. If the enclosure components are non-exchangeable, the device must be taken out of operation.
its intended use	If the device is not used according to its intended use, it must be taken out of operation.
if the conductors are clamped properly	clamp loose conductors tightly.
the cables for ageing and damage	replace damaged or aged cables.
the seals for ageing and damage	replace damaged, aged and porous seals and completely change enclosure components with foamed seal.

EN

10.1.1 Replacement of lamps

i	**Only use fluorescent lamps with pins made of brass.**

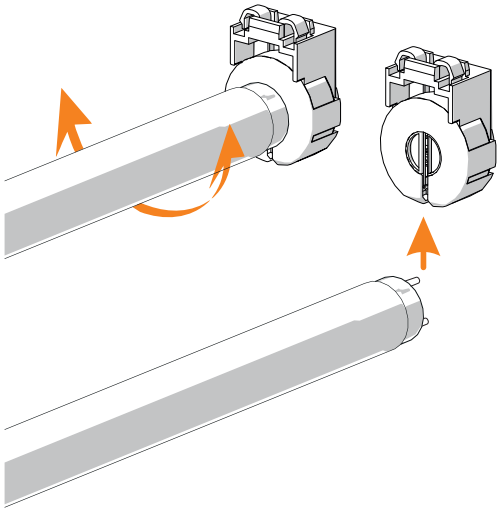

- Insert both lamp bases of the lamp into the holder slots as far as possible.
- Put the lamp into operating position by turning it to the right or to the left.
- Dismounting is carried out in reverse order.

Note:

- The lamp bases must be undamaged.
- The holders have a springy length compensation of 2.5 mm each.
- Observe the fit of the lamp; the lamp fit will be locked after turning the lamp.
- Replace the lamps in due time.
- Observe the service life specified by the manufacturer.
- EOL- safety shutdown: The EB switches off the lamp at the end of the service life.

10.1.2 Replacing the luminaire cover

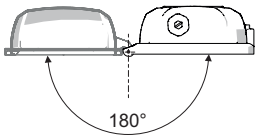

- Open the luminaire.
- Swivel the translucent cover backwards by 180°.
- Lift the translucent cover to detach it from the hinge.
- Insert new translucent cover into the hinge.
- All hinges must engage properly.
- Close the luminaire.
- Observe safety notes!

10.1.3 Cleaning

NOTE
The luminaire is marked with the warning **"Clean with damp cloth only"**.

- Clean the device only with a damp cloth.
- Use water or mild cleaning agents.
- Do not use abrasive, scratching and aggressive detergents or solvents.

EN

10.2 Returning the device

Contact Larson Electronics customer service at the phone number listed below.
Please have your order number ready.

11 Disposal

- Observe national and local regulations and statutory regulation regarding disposal.
- Separate materials when sending it for recycling.
- Ensure environmentally friendly disposal of all components according to the statutory regulations.

12 Accessories and Spare parts

NOTE
Malfunction or damage to the device due to the use of non-original components. Non-compliance can result in material damage. • Use only original accessories and spare parts from Larson Electronics.