MAST INSTALLATION

Telescoping Mobile Light Tower
Part# WCDE SERIES

This mobile light tower ships with the light head, mast, and winch handle removed to prevent damage during transport. Follow the steps below for installing these parts.

1. Place light tower in an area accessible by forklift or similar lifting device. Remove shipping wrap and straps holding light mast to bottom pallet. Slide light mast out from underneath and set aside.



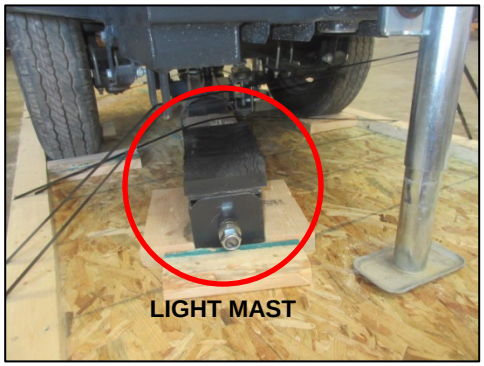

2. Cut straps and remove the light head from top of light tower and set aside. **<u>WARNING:</u> THERE IS A POWER CABLE ATTACHING THE LIGHT HEAD TO THE TRAILER. DO NOT OVER EXTEND CABLE.**



At this point it is safe to cut any additional straps.

3. Move the tongue down to its tow position. There are 3 bolts near the base of the tongue. Only remove the top(1) and bottom(3) bolts.



Bolt: 13/16”
Nut: 7/8”

4. Loosen the center bolt and pivot the tongue downward until horizontal with the trailer. Align the holes and replace the 2 bolts removed earlier. Tighten all bolts to secure tongue.



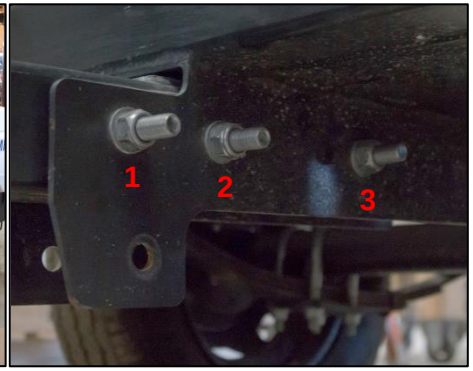

5. Locate light mast and remove bottom nut and 3 washers. Set these aside as they will be used to secure the light mast to trailer.

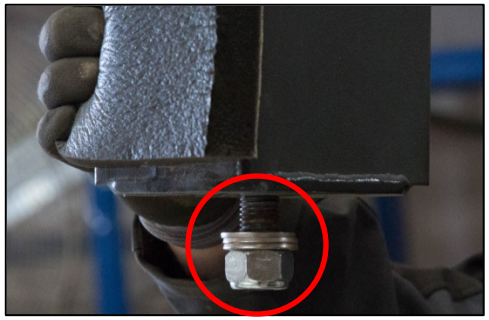

6. Use a pair of slings to lift and install light mast to trailer. Take appropriate safety precautions when maneuvering equipment on lift.

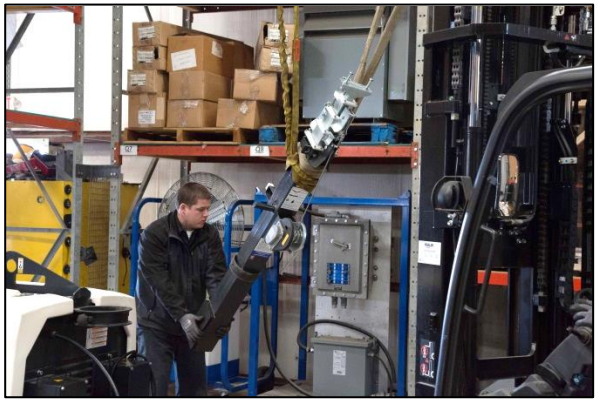

7. Align the mast through the center collar toward the front of the trailer (side with tongue). Be careful not to tear the foam piece while installing light mast. This foam heat shield should face toward the vents on the trailer.

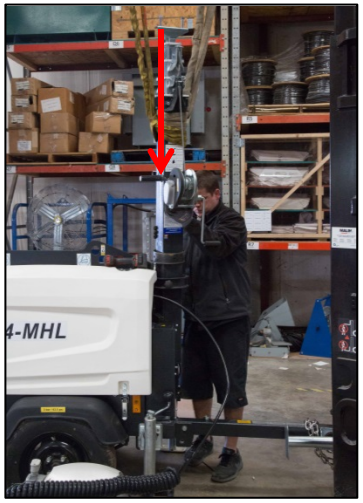



HAND SCREW

8. Make sure the hand screws of the rotating collar are loosened all the way to allow the light mast to be fully seated.
9. Before inserting bolt of light mast to base, place 2 washers first. Then, slide mast and bolt down all the way. Install last washer and nut to other side and tighten. See reference photos.

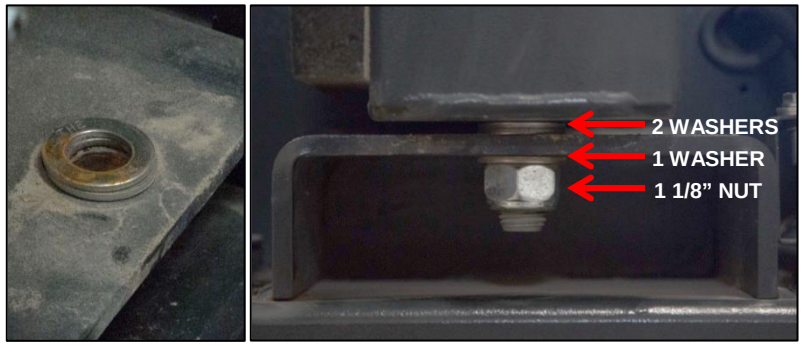

10. Next, align the mast center and tighten hand screws for rotating collar. This locks mast in place and will prevent it from rotating while installing light head.

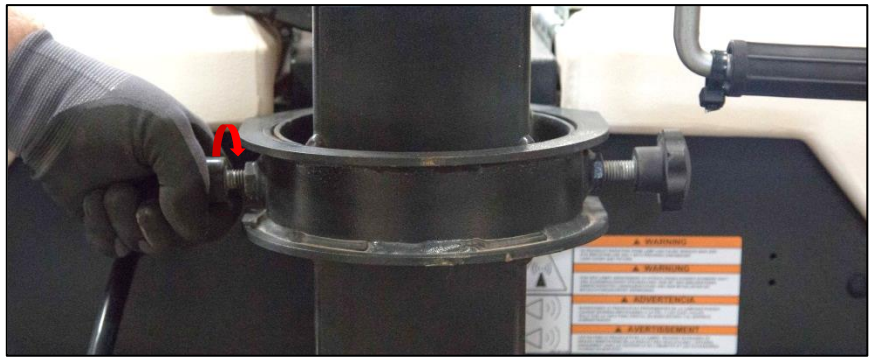

11. Remove the 2 bolts and 2 washers on top of mast for installing the light head.

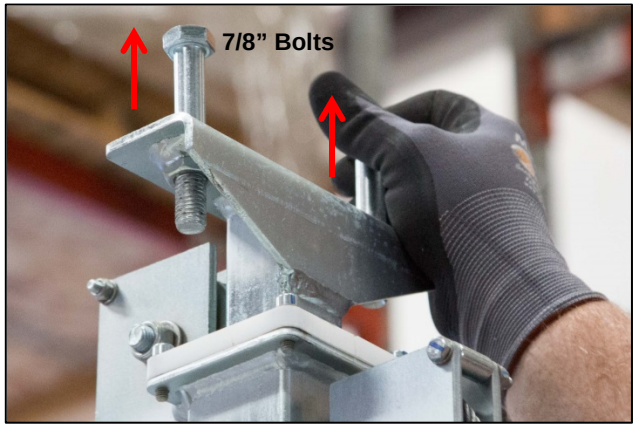

INSTALLING LIGHT HEAD

1. Locate the light head. Make sure it is able to be removed from the pallet.



2. Using a pair of slings, wrap both slings around the light head in between the lights on both sides.



3. Attach the slings to a forklift or similar lifting device.



4. With 2 people holding the light head steady, slowly raise the light head above the mast.

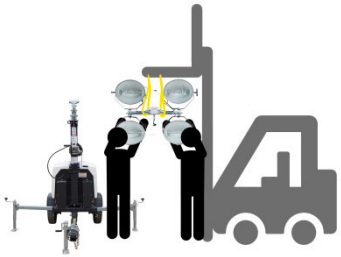

5. A ladder will need to be placed on both sides of the mast, in order for 2 people to guide the head in to place.

LIGHT HEAD SHOWN MAY VARY

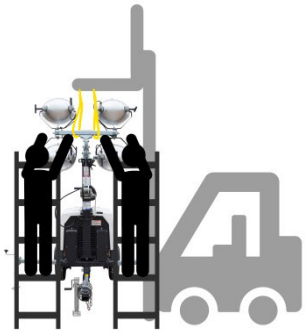

6. Once the light head is on top of the light mast, replace the two bolts, washers, and tighten. Ensure the light head is safely secured to the top of the mast before releasing slack from slings.



7. Using a 5/16” allen wrench, open the cable clamp and place light tower cable inside. See reference photos. Once installed, replace top cover and tighten screws.

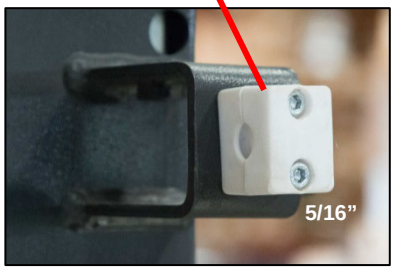



8. Repeat this process in reverse order for removing the light head.

INSTALLING WINCH HANDLE

1. The winch handle is located near the winch. It is strapped to the mast for transport. Cut the strap to free the winch handle from the mast.



2. Install winch handle to winch by aligning the two set holes with the screws on the handle. Press the handle into bolt and tighten set screws.





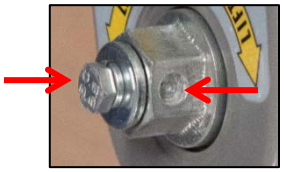

5/16” Socket Screws

Remove trailer from pallet and light tower is ready for deployment.



Proceed to the **OPERATION MANUAL** for operating the unit.

LARSON ELECTRONICS

9419 US-HWY 175
Kemp, TX 75143 USA
P: 877-348-9680 | INTL: 903-498-3363 F: 903-498-3364
sales@larsonelectronics.com
www.larsonelectronics.com

Operator's Manual

Serial Number Range

WCDE-4 SERIES

ANSI/CSA
North America
South America
Asia

with
Maintenance
Information

Important

Read, understand and obey these safety rules and operating instructions before operating this machine. Only trained and authorized personnel shall be permitted to operate this machine. This manual should be considered a permanent part of your machine and should remain with the machine at all times. If you have any questions, contact us.

Contact Us:

Internet: www.larsonelectronics.com

E-mail: sales@larsonelectronics.com

Contents

Introduction 1
Symbol and Hazard Pictorials Definitions 3
General Safety 5
Work Area Safety 9
Legend 14
Controls 16
Inspections 18
Operating Instructions 28
Transport and Lifting Instructions 34
Maintenance 36
Specifications 39
Reporting Safety Defects 40

These machines comply with
ANSI/SIA A92.5
CAN B.354.4

Introduction

Owners, Users and Operators:

Thank you for choosing our machine for your application. Our number one priority is user safety, which is best achieved by our joint efforts. We feel that you make a major contribution to safety if you, as the equipment users and operators:

1 **Comply** with employer, job site and governmental rules.

2 **Read, understand and follow** the instructions in this and other manuals supplied with this machine.

3 **Use good safe work practices** in a commonsense way.

4 **Only have trained/certified operators**, directed by informed and knowledgeable supervision, running the machine.



Danger

Failure to obey the instructions and safety rules in this manual will result in death or serious injury.

Do Not Operate Unless:

☑ You learn and practice the principles of safe machine operation contained in this operator's manual.

1 Avoid hazardous situations.

Know and understand the safety rules before going on to the next section.

2 Always perform a pre-operation inspection.

3 Always perform function tests prior to use.

4 Inspect the workplace.

5 Only use the machine as it was intended.

☑ You read, understand and obey the manufacturer's instructions and safety rules—safety and operator's manuals and machine decals.

☑ You read, understand and obey employer's safety rules and worksite regulations.

☑ You read, understand and obey all applicable governmental regulations.

☑ You are properly trained to safely operate the machine.

Introduction

Hazard Classification

Decals on this machine use symbols, color coding and signal words to identify the following:



Safety alert symbol—used to alert you to potential personal injury hazards. Obey all safety messages that follow this symbol to avoid possible injury or death.

⚠ DANGER Indicates a hazardous situation which, if not avoided, will result in death or serious injury.

⚠ WARNING Indicates a hazardous situation which, if not avoided, could result in death or serious injury.

⚠ CAUTION Indicates a hazardous situation which, if not avoided, could result in minor or moderate injury.

NOTICE Indicates a property damage message.

Intended Use

This machine is intended to be used only to provide lighting and electrical power to a work site.

Safety Sign Maintenance

Replace any missing or damaged safety signs. Keep operator safety in mind at all times. Use mild soap and water to clean safety signs. Do not use solvent-based cleaners because they may damage the safety sign material.

Symbol and Hazard Pictorials Definitions

 Read the operator's manual	 Electrocution hazard	 Stop engine	 Earth ground	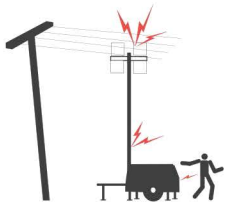 Electrocution hazard
 Maintain required clearance	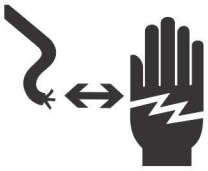 Explosion / Burn hazard	 Disconnect battery Read the service manual	 Crush hazard	 Keep away from moving parts
 Keep away from moving parts	 Stay clear of belts and fan	 Burn hazard	 Explosion / Burn hazard	 Corrosive acid.
 Explosion hazard	 Do not use ether or other high energy starting aids on machines equipped with glow plugs	 No smoking	 No flame	 No flame

Symbol and Hazard Pictorials Definitions

 Burn hazard	 Burn hazard	 Burn hazard	 Stay clear of hot exhaust	 Stay clear of hot exhaust
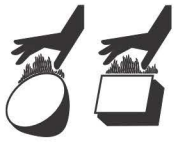 Burn hazard, hot components	 Stay clear of hot surfaces under cover	 Carbon Monoxide hazard	 Wear protective clothing	 Shattering glass hazard
 Crushing hazard	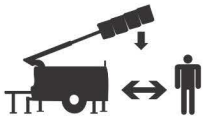 Stay clear of descending mast	 Tip-over hazard	 Deploy outriggers before raising mast	 Tip-over hazard, tow speed
 Lifting point	 Tie-down point			

General Safety

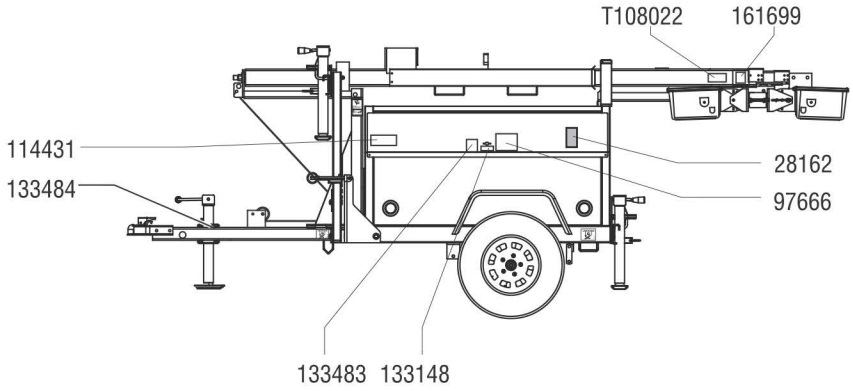

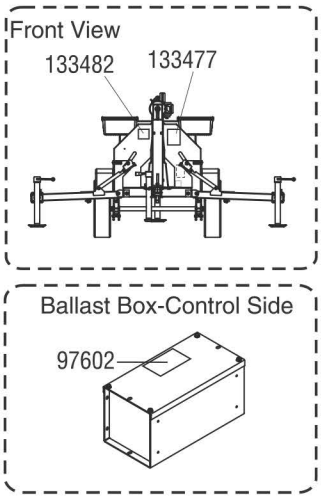

133477

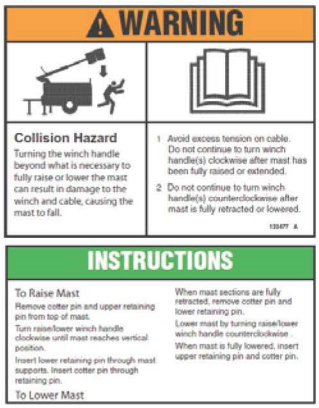

133484

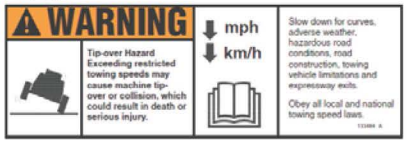

161699



114431

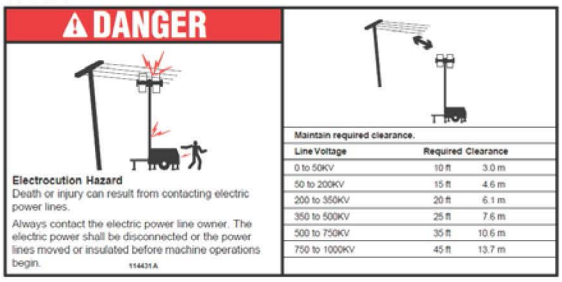

28162



97666

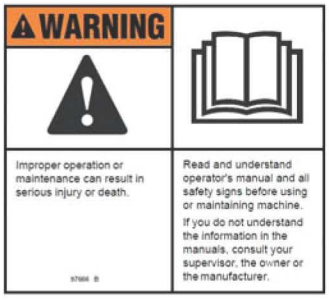

133483

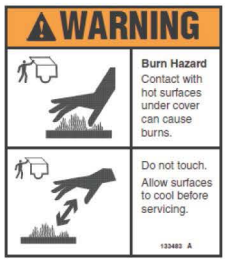

133482

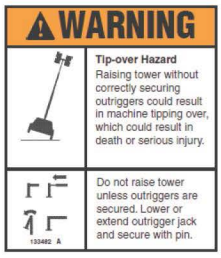

97602

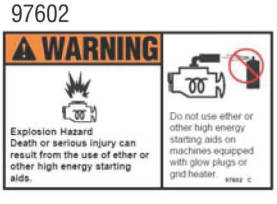

General Safety

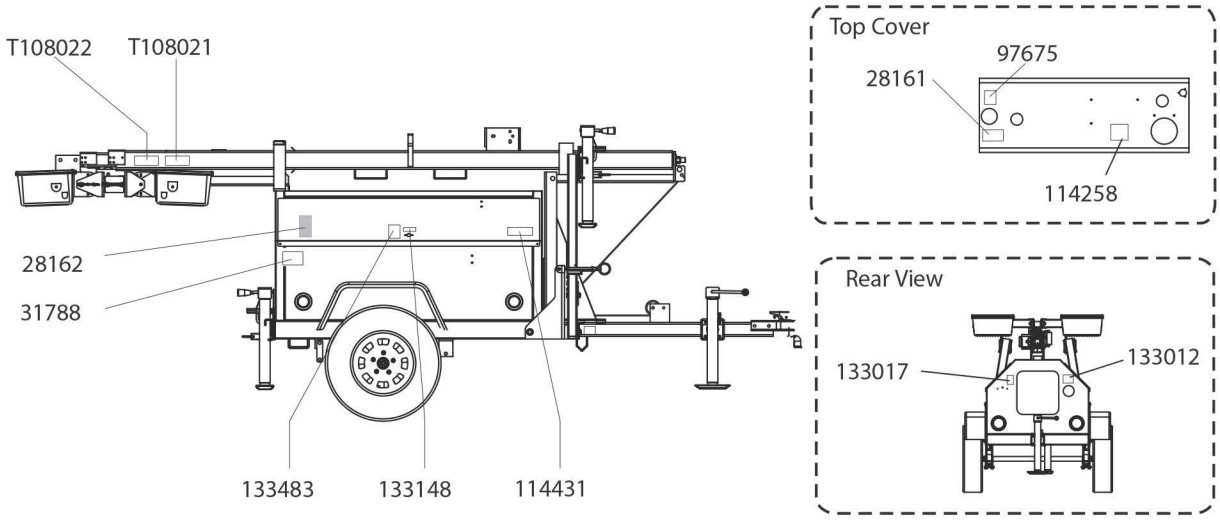

T108022

⚠ WARNING

Burn Hazard
Contact with hot components could result in death or serious injury.

Keep away from hot components.

T108022 A

T108021

⚠ WARNING

Bodily Injury Hazard
Shattering glass could result in death or serious injury.

Keep protective barrier in place.

T108021 A

28161

⚠ WARNING

Crush Hazard
Contact with moving parts can result in death or serious injury.

Keep away from moving parts.

28161 C

133017

⚠ WARNING

Crushing Hazard
Contact with descending tower could result in death or serious injury.

Keep away from machine when tower is being lowered.

133017 A

97675

⚠ WARNING

Burn Hazard
Hot fluid under pressure can scald.

Allow to cool before opening.

97675 B

114258

⚠ DANGER

Burn Hazard
Fuel and fumes can explode and burn.

STOP

No smoking. No flame. Stop engine.

114258 A

133148

⚠ DANGER

Electrocution hazard.
Contact with voltage will result in death or serious injury.

STOP

Shut down engine/generator and disconnect battery supply before servicing.

Read the service manual.

133148 D

31788

⚠ DANGER

Explosion / Burn Hazard
Will cause death, burns or blindness due to ignition of explosive gases or contact with corrosive acid.

Keep all open flames and sparks away. Wear personal protective equipment, including face shield, gloves and long sleeve shirt.

READ MANUALS
Read all manuals prior to operation.

DO NOT OPERATE equipment if you do not understand the information in the manuals.

Consult your supervisor, the owner or the manufacturer.

31788 B

133012

⚠ DANGER

Burn / Carbon monoxide hazard.
Hot exhaust can contain carbon monoxide that will result in death or serious injury.

Do not touch hot surfaces or breathe exhaust. Wear protective gloves when handling hot parts. Read the operator's

133012 A

114431

⚠ DANGER

Electrocution Hazard
Death or injury can result from contacting electric power lines.

Always contact the electric power line owner. The electric power shall be disconnected or the power lines moved or insulated before machine operations begin.

114431 A

Maintain required clearance.

Line Voltage	Required Clearance	
0 to 50KV	10 ft	3.0 m
50 to 200KV	15 ft	4.6 m
200 to 350KV	20 ft	6.1 m
350 to 500KV	25 ft	7.6 m
500 to 750KV	35 ft	10.6 m
750 to 1000KV	45 ft	13.7 m

General Safety

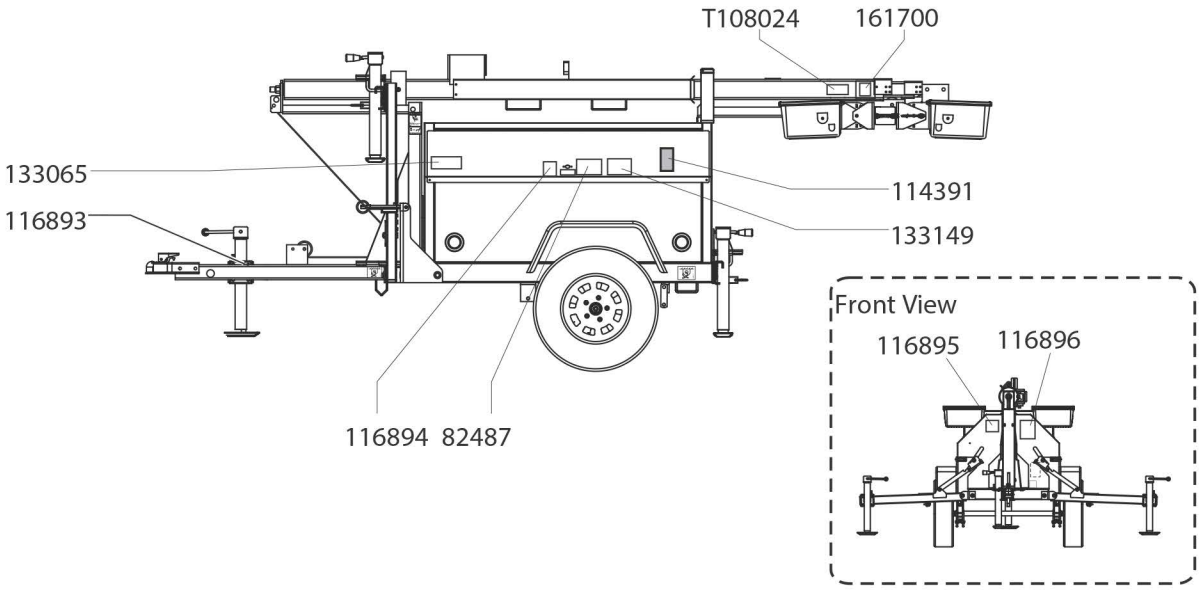

T108024



161700



114391



133149



116895



116896



82487



116894



116893

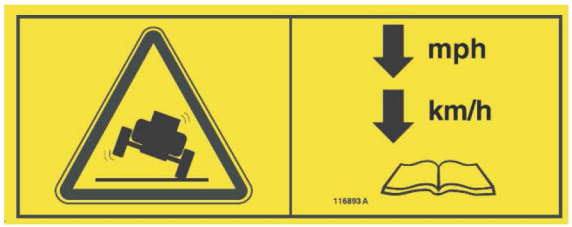

133065



General Safety

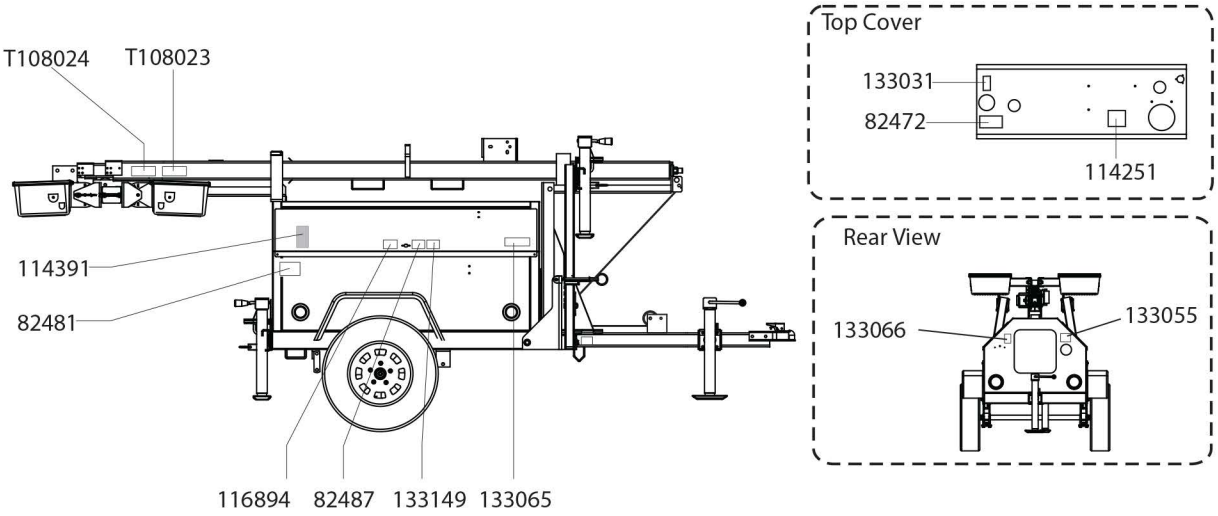

114251



T108023



116894



133149



82472



T108024



133066



133055



114391



82487



133065



133031



82481



Work Area Safety

⚠ Electrocution Hazards

This machine is not electrically insulated and will not provide protection from contact with or proximity to electrical current.

Obey all local and governmental regulations regarding required clearance from electrical power lines. At a minimum, the required clearance contained in the chart below must be followed.

Line Voltage	Required Clearance	
0 to 50KV	10 ft	3.05 m
50 to 200KV	15 ft	4.60 m
200 to 350KV	20 ft	6.10 m
350 to 500KV	25 ft	7.62 m
500 to 750KV	35 ft	10.67 m
750 to 1000KV	45 ft	13.72 m

Allow for mast movement, electrical line sway or sag, and beware of strong or gusty winds.

Do not operate the machine during lightning or storms.

Do not use the machine as a ground for welding.



Keep away from the machine if it contacts energized power lines. Personnel must not touch or operate the machine until energized power lines are shut off.

Do not connect wires directly to the generator. Connect auxiliary equipment only to the power outlets provided.

Do not perform service or replace the lamps with the engine/generator running or batteries connected.

This machine should be grounded in accordance with all local electrical codes. Consult the local electrical codes or authority having jurisdiction in the area where the machine will be used for specific requirements.

There is a permanent conductor between the generator (static winding) and the frame.

⚠ Explosion and Fire Hazards

Do not start the engine if you smell or detect liquid petroleum gas (LPG), gasoline, diesel fuel or other explosive substances.



Do not refuel the machine with the engine running.

Do not refuel the machine while it is hot. Allow to cool for several minutes before refueling.

Do not spill fuel inside the engine compartment.

Refuel the machine and charge the battery only in an open, well-ventilated area away from sparks, flames and lighted tobacco.

Do not operate the machine in hazardous locations or locations where potentially flammable or explosive gases or particles may be present.



Do not spray ether into engines equipped with glow plugs.

Work Area Safety

⚠ Tip-over Hazards



Do not raise the mast unless all outriggers are properly deployed, the foot pads are in firm contact with the ground and the machine is level.

Do not set the machine up on a surface where it cannot be leveled using only the leveling jacks.

Do not hang objects from the lights or the mast.

Do not use the mast to raise material or personnel.

Do not move the machine unless the mast is lowered to the horizontal position.



Do not raise the mast when wind speeds may exceed 62 mph / 100 km/h. Do not alter or disable machine components that in any way affect safety and stability.

Do not alter or disable machine components that in any way affect safety and stability.

Do not adjust or stow the outriggers when the mast is raised.

Be sure the tires are in good condition and the lug nuts tightened.



Do not place ladders or scaffolds against any part of the machine.

Do not use the machine on a moving or mobile surface or vehicle.

⚠ Crushing Hazard



Do not lower the mast unless the area below is clear of personnel and obstructions.

Keep hands and fingers away from any potential pinch points.

Do not lower the mast until the mast is retracted and the upper retaining bar is locked into the mast. No red should be visible on the mast.

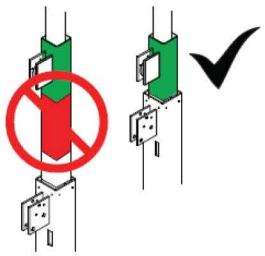

⚠ Collision Hazards

Check the work area for overhead obstructions or other possible hazards.

⚠ Burn Hazards



Do not touch the lamp fixtures while they are turned on. Turn the lamps off and allow them to cool before touching.

Do not touch hot parts of the engine or tailpipe, Use protective gloves when handling hot parts.

⚠ Bodily Injury Hazard

Do not use the machine indoors unless properly ventilated.

Do not breathe exhaust fumes.

Work Area Safety

Do not work on this equipment when mentally or physically fatigued.

Do not work on this equipment when under the influence of drugs or alcohol.

Stay clear of belts and fan when engine is running.

Do not use the machine if the protective barrier on any of the lamps is broken or punctured. Metal halide lamps produce shortwave ultra-violet radiation and can cause serious skin burns or eye inflammation if the protective barrier is not in place.

Do not use where people will remain close to the lamps for more than a few minutes unless adequate shielding or other safety precautions are used.

Stay clear of moving mast.

Do not grasp the cable.

Use proper lifting techniques when lifting and positioning the tongue of the machine.

Always replace the protective lamp cover after replacing the lamp bulbs.

⚠ Fall Hazards

Do not climb or stand on any part of the light tower.

⚠ Traffic Hazards

Stand clear of traffic when starting or checking the unit along the road.

⚠ Damaged Machine Hazards

Do not use a damaged or malfunctioning machine.

Do not use a machine with a worn, frayed, kinked or damaged cable.

Conduct a thorough pre-operation inspection of the machine and test all functions before each work shift. Immediately tag and remove from service a damaged or malfunctioning machine.

Be sure all maintenance has been performed as specified in this manual and the appropriate Larson Electronics service manual.

Be sure the operator's manual is complete, legible and in the storage container located on the machine.

Be sure all decals are in place and legible.

Do not modify or alter the light tower without the prior written permission of the manufacturer.

Work Area Safety

⚠ Component Damage Hazards

Do not turn the lights on unless the engine is running. Always turn the lights off before shutting down the engine.

Do not tow the light tower while the lamps are hot. Hot lamps will break if moved.

Do not replace lamp bulbs with any bulbs other than those specified on the machine and in this manual.

Note: Lamp bulbs contain mercury (Hg). Dispose of lamp bulbs according to local, state and federal laws.

Be sure lamp fixture connections are properly tightened before turning lights on.

⚠ Battery Safety

Burn Hazards

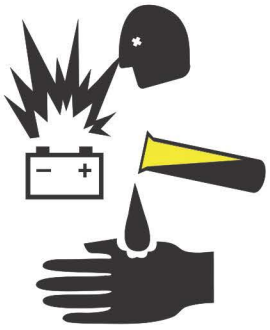

Batteries contain acid. Always wear protective clothing and eye wear when working with batteries.

Avoid spilling or contacting battery acid. Neutralize battery acid spills with baking soda and water.

Do not use any battery charger greater than 12V to charge the battery.

Do not remove the vent caps from the battery when charging.

Do not expose the batteries or the charger to water or rain during charging.

Explosion Hazards



Keep sparks, flames and lighted tobacco away from batteries. Batteries emit explosive gas.

Do not contact the battery terminals or the cable clamps with tools that may cause sparks.

Electrocution/Burn Hazards

Avoid contact with electrical terminals.

Inspect the power cord for damage prior to each use.

Replace any damaged cord before operating.

Do not allow the power cord to become caught or crushed while raising, lowering or rotating the mast.

Avoid electrical shock from contact with battery terminals. Remove all rings, watches and other jewelry.

Lifting Hazard

Use the appropriate number of people and proper lifting techniques when lifting the batteries.

Work Area Safety

⚠ Towing Hazards

Read, understand and obey all of your tow vehicle manufacturer's recommendations, warnings and instructions before towing this machine.

Do not tow the machine unless the mast is retracted and lowered to the horizontal position and the travel lock pin is secured.

Do not tow the machine unless all outriggers have been retracted and stowed.

Do not overload your tow vehicle. Check the manufacturer's Gross Vehicle Weight Rating (GVWR). To obtain the gross vehicle weight, add the tongue weight of the trailer to the vehicle weight (including vehicle, passengers and cargo).

Do not load cargo on the machine. The light tower is not designed to carry any extra cargo.

Be sure the hitch is securely attached to the tow vehicle.

Be sure the safety chains (if required) are securely attached to the tow vehicle.

Be sure that all driving lights are operational.

Be sure all hitch components, lights and mirrors and methods of attaching the trailer to the tow vehicle conform to local, state and federal regulations.

Do not tow the machine on public roads unless it meets all governmental regulations for towing.

Do not exceed 60 mph / 97 km/h. Obey all local and national towing speed laws.

Be sure to chock the wheels when parking on a hill.

Use extreme care and slow speeds while towing across uneven terrain, debris, holes or drop-offs.

Note: Do not tow machine when engine is running! This can cause severe engine/radiator damage and WILL NOT BE COVERED UNDER WARRANTY!

Lockout After Each Use

When leaving the machine unattended, secure from unauthorized use. Unauthorized personnel may attempt to operate the machine without proper instruction, creating an unsafe condition.

Legend

Legend - RL4 & RL4000

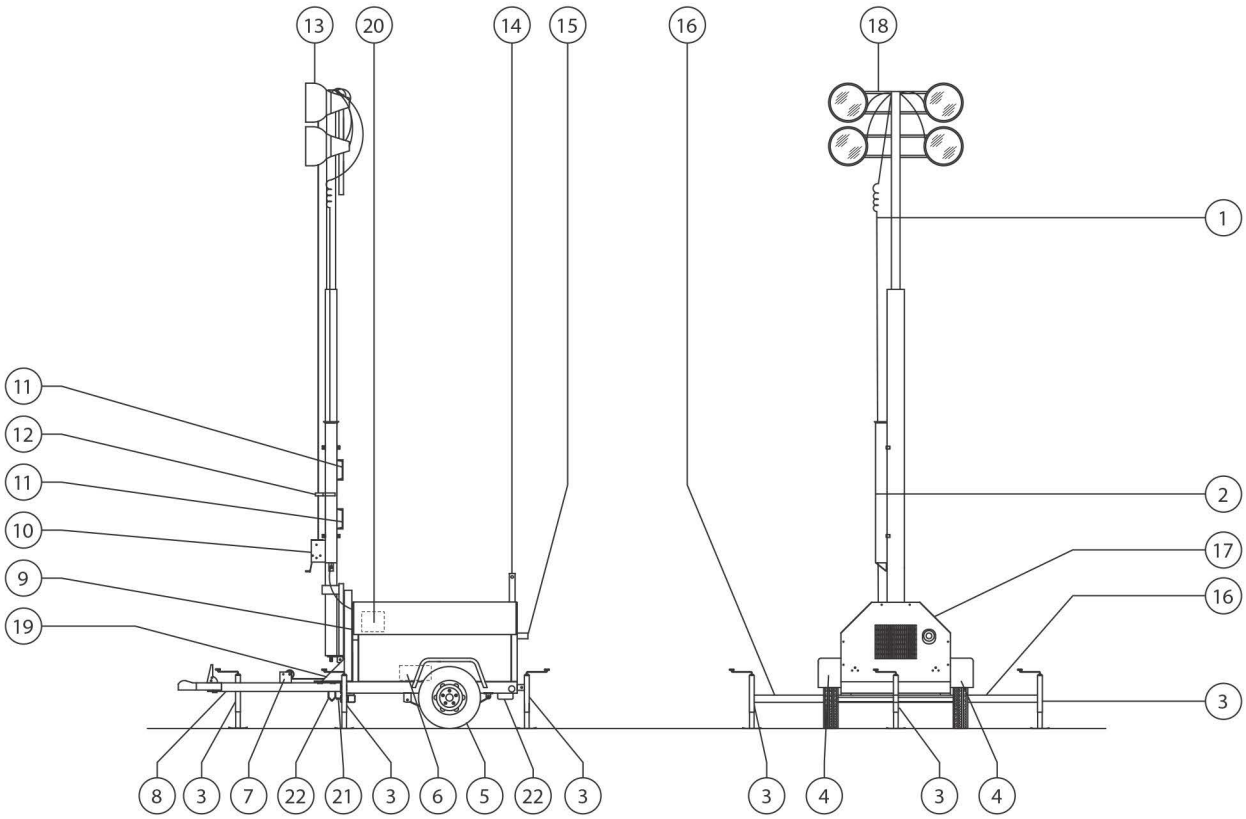

1 Coil cord
2 Coil cord sleeve
3 Tongue leveling jack
4 Fender
5 Tire
6 Ballast (located inside cabinet)
7 Raise/lower winch
8 Tongue with trailer hitch
9 Roadside door
10 Extend/retract winch
11 Forklift pockets
12 Lifting eye
13 Lamps
14 Upper retaining bar
15 Muffler
16 Outrigger
17 Curbside door
18 Light bar
19 Lower retaining pin
20 Control panel (located inside cabinet)
21 Spring pin
22 Tie-downs

Legend

Legend - TML-4000

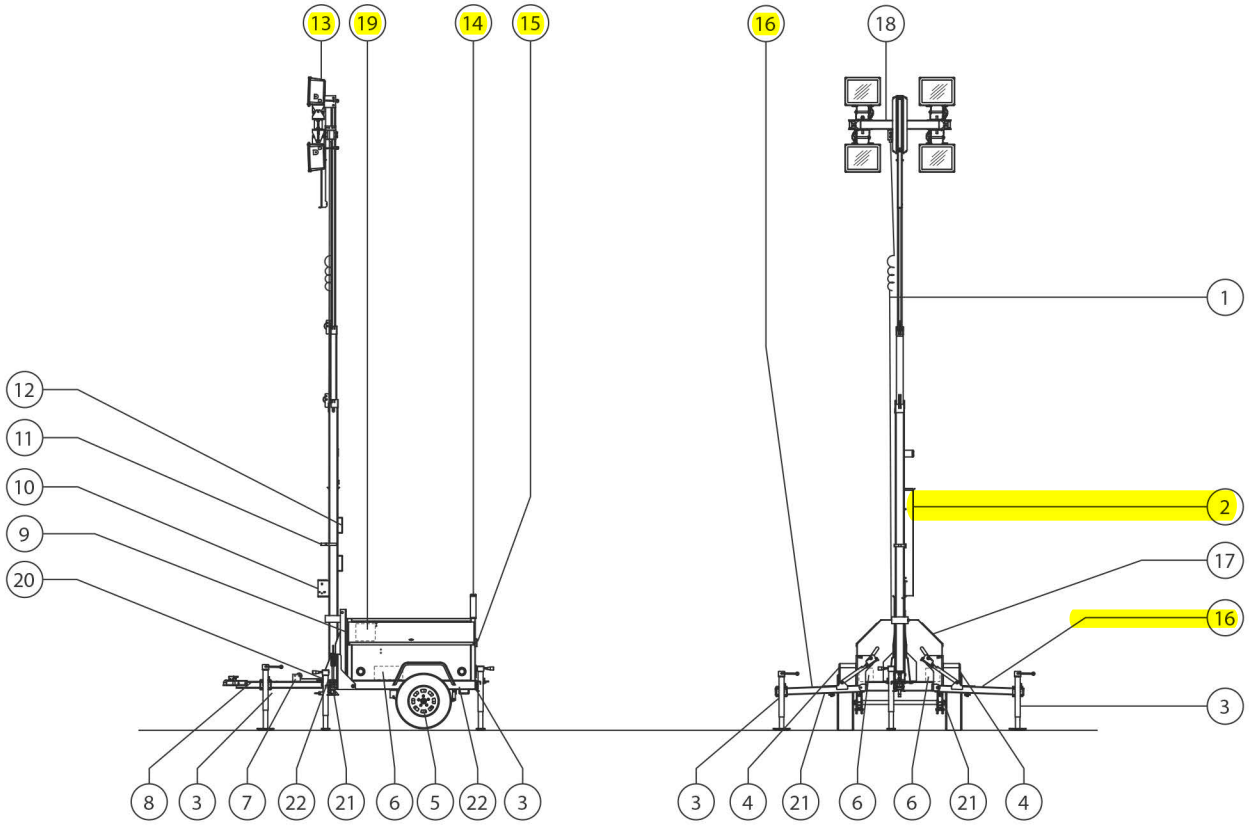

1 Coil cord
2 Coil cord sleeve
3 Tongue leveling jack
4 Fender
5 Tire
6 Ballast (located inside cabinet)
7 Raise/lower winch
8 Tongue with trailer hitch
9 Roadside door
10 Extend/retract winch
11 Lifting eye
12 Forklift pockets
13 Lamps
14 Upper retaining bar
15 Muffler
16 Outrigger
17 Curbside door
18 Light bar
19 Control panel (located inside cabinet)
20 Lower retaining pin
21 Outrigger release pin
22 Tie-downs

Controls

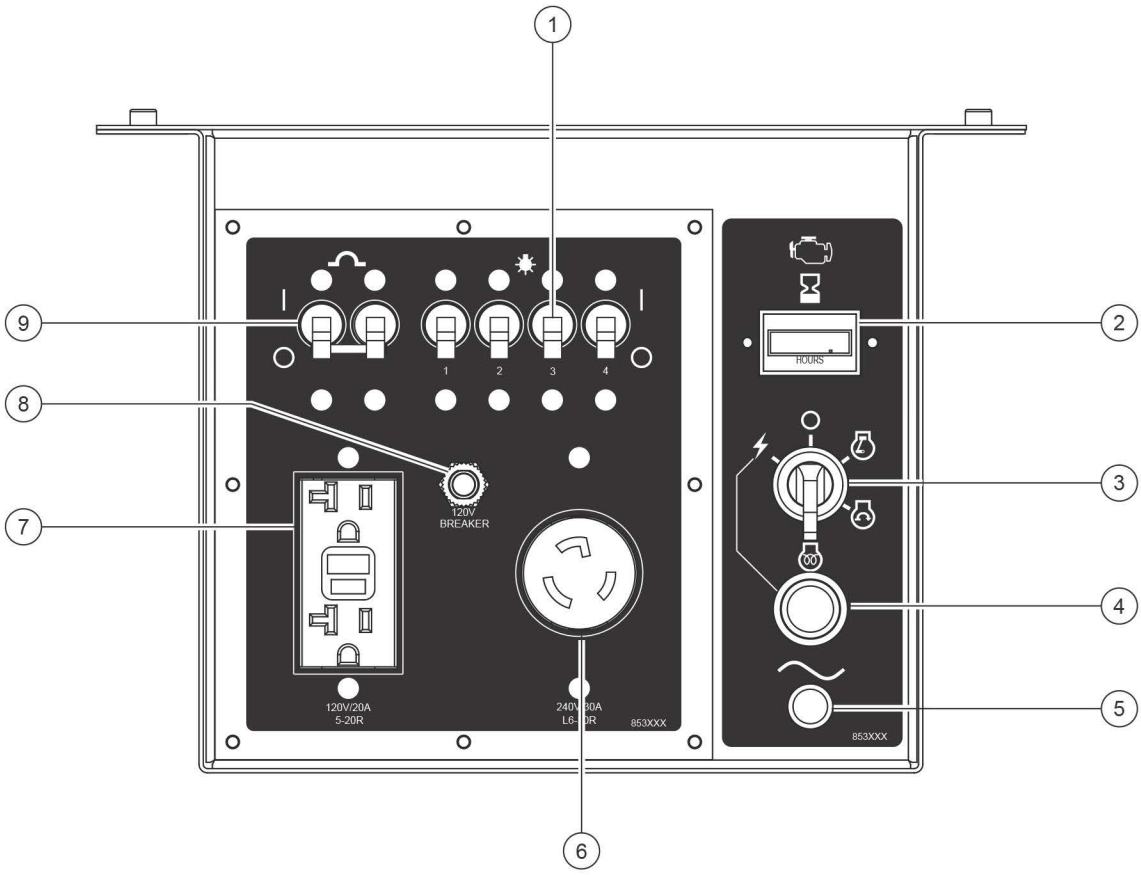

Ground Control Panel

1 Light switches
2 Hour meter
3 Ignition switch for engine
4 Engine prime button
5 Alternator failure light
6 T-lock receptacle, 240V/30A
7 Duplex receptacle with GFI, 120V/20A
8 Mini breaker, 120V
9 Main circuit breaker

Controls

Control Panel

1 Light switches

Move each light switch up to turn on the indicated light. Move each light switch down to turn off the indicated light.

2 Hour meter

The hour meter displays the number of hours the machine has operated.

3 Ignition switch for engine

Turn the ignition switch to the prime position and hold the engine prime button down to prime the engine.

Hold the prime button down and turn the ignition switch to the start position to start the engine.

Turn the ignition switch to the off position to turn the engine off.

4 Engine prime button

With the ignition switch in the run position, press and hold the prime button for 15 seconds before starting the engine. Release the prime button when the engine starts.

5 Alternator failure light

Light on indicates that the engine's DC alternator isn't producing enough voltage.

6 T-lock receptacle, 240V/30A

7 Duplex receptacle with GFI, 120V/20A

Convenience duplex receptacle with Ground Fault Interrupter (GFI).

8 Mini breaker, 120V

Pop-out style breaker. Push in button to insure GFI receptacle is ready for use.

9 Main circuit breaker

Move the main circuit breaker switch up on the control panel before turning the individual light switches on or before attempting to use the convenience receptacles.

Inspections



Do Not Operate Unless:

☑ You learn and practice the principles of safe machine operation contained in this operator's manual.

1 Avoid hazardous situations.

2 Always perform a pre-operation inspection.

Know and understand the pre-operation inspection before going on to the next section.

3 Always perform function tests prior to use.

4 Inspect the workplace.

5 Only use the machine as it was intended.

Pre-operation Inspection Fundamentals

It is the responsibility of the operator to perform a pre-operation inspection and routine maintenance.

The pre-operation inspection is a visual inspection performed by the operator prior to each work shift. The inspection is designed to discover if anything is apparently wrong with a machine before the operator performs the function tests.

The pre-operation inspection also serves to determine if routine maintenance procedures are required. Only routine maintenance items specified in this manual may be performed by the operator.

Refer to the list on the next page and check each of the items.

If damage or any unauthorized variation from factory delivered condition is discovered, the machine must be tagged and removed from service.

Repairs to the machine may only be made by a qualified service technician, according to the manufacturer's specifications. After repairs are completed, the operator must perform a pre-operation inspection again before going on to the function tests.

Scheduled maintenance inspections shall be performed by qualified service technicians, according to the manufacturer's specifications and the requirements listed in the responsibilities manual.

Inspections

Pre-operation Inspection

- ❑ Be sure that the operator's manual is complete, legible and in the storage container located on the machine.
- ❑ Be sure that all decals are legible and in place. See Inspections section.
- ❑ Check for engine oil leaks and proper fluid level. Add oil if needed. See Maintenance section.
- ❑ Check for engine coolant leaks and proper coolant level. Add coolant if necessary. See Maintenance section.
- ❑ Check for battery fluid leaks and proper fluid level. Add distilled water if needed. See Maintenance section.
- ❑ Check for proper tire pressure and lug nut torque. Add air to tires if needed. See Maintenance section.

Check the following components or areas for damage, improperly installed or missing parts and unauthorized modifications:

- ❑ Electrical components, wiring and electrical cables
- ❑ Mast components
- ❑ Mast locking pins
- ❑ Latches and pins
- ❑ Tires and wheels
- ❑ Trailer lights and reflectors
- ❑ Outriggers, leveling jacks and foot pads
- ❑ Winch
- ❑ Nuts, bolts and other fasteners
- ❑ Lamp fixtures, connections and bulbs
- ❑ Cable (kinks, frays and abrasions)
- ❑ Safety chains
- ❑ Engine and related components
- ❑ Fuel tanks
- ❑ Generator

Check entire machine for:

- ❑ Cracks in welds or structural components
- ❑ Dents or damage to machine
- ❑ Excessive rust, corrosion or oxidation

- ❑ Be sure that all structural and other critical components are present and all associated fasteners and pins are in place and properly tightened.
- ❑ Be sure the that the battery is in place and properly connected.
- ❑ After you complete your inspection, be sure that all compartment covers are in place and latched.

Inspections



Do Not Operate Unless:

☑ You learn and practice the principles of safe machine operation contained in this operator's manual.

1 Avoid hazardous situations.

2 Always perform a pre-operation inspection.

3 Always perform function tests prior to use.

Know and understand the function tests before going on to the next section.

4 Inspect the workplace.

5 Only use the machine as it was intended.

Function Test Fundamentals

The function tests are designed to discover any malfunctions before the machine is put into service. The operator must follow the step-by-step instructions to test all machine functions.

A malfunctioning machine must never be used. If malfunctions are discovered, the machine must be tagged and removed from service. Repairs to the machine may only be made by a qualified service technician, according to the manufacturer's specifications.

After repairs are completed, the operator must perform a pre-operation inspection and function tests again before putting the machine into service.

Inspections

Function Tests

Setup

1 Position the light tower at the desired work site.

2 Chock the wheels.

3 Disconnect the trailer lights and the safety chains.

4 Open the latch on the trailer hitch.

5 Pull the release pin on the tongue jack and rotate into place.

6 Turn the leveling jack handle to lower the front outrigger foot pad and raise the tongue of the machine enough to clear the tow vehicle.

7 Release the spring pin on the side outriggers and slide them out into the deployed position. Make sure the outriggers are locked in place. Rotate the leveling jack into position.

Pull the release pin on the side outriggers and lower them to the ground. Rotate the leveling jack into position.

Note: the outriggers are not designed to lift the tires of the unit off the ground.

8 Turn the leveling jack handles to level the machine. Level the machine using only the leveling jacks

Note: the outriggers are not designed to lift the tires of the unit off the ground.

9 Check the bubble level (if equipped) on the front of the machine to make sure the machine is level.

Note: This machine should be grounded in accordance with all local electrical codes. Consult the local electrical codes or authority having jurisdiction in the area where the machine will be used for specific requirements.

Test Machine Functions

By raising and extending, then retracting and lowering the mast back to the horizontal position, the following functions will be tested:**winches, latches, mast extension and mast rotation.**

10 Remove the cotter pin and the upper retaining pin from the top of the mast.

11 Turn the raise/lower winch handle clockwise until the mast raises approximately 2 feet / 60 cm.

⊙ Result: A clicking sound should be heard as the mast raises.

12 Release the winch handle.

⊙ Result: The winch brake should hold the mast.

13 Continue to turn the winch handle clockwise until the lower retaining bar locks into the mast.

⊙ Result: The mast sections should raise smoothly, free of hesitation or binding.

14 Insert the lower retaining pin through mast supports. Insert the cotter pin through retaining pin.

Inspections

15 Turn the extend/retract winch handle clockwise until the mast extends approximately 2 feet / 60 cm.

⊙ Result: A clicking sound should be heard as the winch handle is turned.

16 Release the winch handle.

⊙ Result: The winch brake should hold the mast.

17 Continue to turn the winch handle clockwise until the mast reaches full vertical position.

⊙ Result: The mast sections should extend smoothly, free of hesitation or binding.

18 Turn the T-handle to release the mast rotation lock.

19 Rotate the mast clockwise and then counterclockwise as far as it will go in either direction.

⊙ Result: The mast should rotate smoothly and easily in both directions.

20 Rotate the mast to line up the arrows on the front of the mast.

21 Tighten the T-handle to secure the mast.

22 Attempt to rotate the mast in both directions.

⊙ Result: The mast should not rotate.

23 Turn the extend/retract winch handle counterclockwise until the mast sections are fully retracted.

⊙ Result: No clicking sound should be heard when the winch handle is turned.

24 Remove the cotter pin and lower retaining pin.

25 Begin lowering the mast to the horizontal position by turning the raise/lower winch handle counterclockwise.

⊙ Result: No clicking sound should be heard when the winch handle is turned.

26 Turn the winch handle counterclockwise until the mast is lowered into the travel lock.

27 Insert the lower retaining pin into the mast support and install the cotter pin to secure.

Test the Lights

28 Make sure the circuit breakers and the light switches are in the off position.

Note: Be sure the lamp fixture connections are properly tightened before turning the lights on.

29 Start the engine. See Starting the Engine in the Operating Instructions section.

30 Turn the main circuit breakers to the on position.

31 Turn the light switches to the on position.

⊙ Result: The lights should come on.

Note: It can take up to 20 minutes for the lights to reach full intensity. If the lights are turned off and turned back on while they are still warm, they will not light up again for 20-30 minutes.

Note: Make sure the circuit breaker and the light switches are turned off before shutting down the engine.

Inspections



Do Not Operate Unless:

☑ You learn and practice the principles of safe machine operation contained in this operator's manual.

1 Avoid hazardous situations.

2 Always perform a pre-operation inspection.

3 Always perform function tests prior to use.

4 Inspect the workplace.

Know and understand the workplace inspection before going on to the next section.

5 Only use the machine as it was intended.

Workplace Inspection Fundamentals

The workplace inspection helps the operator determine if the workplace is suitable for safe machine operation. It should be performed by the operator prior to moving the machine to the workplace.

It is the operator's responsibility to read and remember the workplace hazards, then watch for and avoid them while moving, setting up and operating the machine.

Workplace Inspection Checklist

Be aware of and avoid the following hazardous situations:

- ❑ drop-offs or holes
- ❑ bumps, floor obstructions or debris
- ❑ sloped surfaces
- ❑ unstable or slippery surfaces
- ❑ overhead obstructions and high voltage conductors
- ❑ hazardous locations
- ❑ inadequate surface support to withstand all load forces imposed by the machine
- ❑ wind and weather conditions
- ❑ the presence of unauthorized personnel
- ❑ other possible unsafe conditions

Operating Instructions



Do Not Operate Unless:

☑ You learn and practice the principles of safe machine operation contained in this operator's manual.

1 Avoid hazardous situations.

2 Always perform a pre-operation inspection.

3 Always perform function tests prior to use.

4 Inspect the workplace.

5 Only use the machine as it was intended.

Fundamentals

The Operating Instructions section provides instructions for each aspect of machine operation. It is the operator's responsibility to follow all the safety rules and instructions in the operator's, safety and responsibilities manuals.

Only trained and authorized personnel should be permitted to operate a machine. If more than one operator is expected to use a machine at different times in the same work shift, they must all be qualified operators and are all expected to follow all safety rules and instructions in the operator's, safety and responsibilities manuals. That means every new operator should perform a pre-operation inspection, function tests, and a workplace inspection before using the machine.

Operating Instructions

Setup

Make sure the machine is set up according to the Setup procedure in the Function Test section.

Starting the Engine

Note: The main circuit breaker and the light switches must be off before starting the engine.

Note: There must be fuel in the fuel tank in order to start the engine.

Note: If the machine is equipped with dual fuel tanks, there must be fuel in both tanks in order to start the engine.

Engine Start

1 Move the ignition switch to the prime position.

2 Press and hold the prime button for 7 seconds.

3 Move the ignition switch to the run position.

4 Press and hold the prime button for 15 seconds.

Note: Never preheat the engine for more than 30 seconds. Damage may be done to the glow plugs.

5 While holding down the prime button, move the ignition switch to engine start position.

Note: To avoid damage, never operate the starter for more than 45 seconds when starting the engine.

Engine Shutdown

1 Turn the lights off using the individual light switches.

Note: After being turned off, the lights must be allowed to cool down before turning them on again. This cool down period can take between 10 and 25 minutes depending on the ambient temperature.

2 Allow the engine to run for 1 to 5 minutes under no load.

Note: Never shut the engine down while under load. This can damage the AC generator.

3 Turn the ignition switch to the engine off position.

Operating Instructions

Operation of Tower

1 Remove the cotter pin and the upper retaining pin from the top of the mast.

2 Remove the cotter pin and the retaining pin from the mast support.

3 Turn the raise/lower winch handle clockwise until the mast reaches vertical position.

4 Insert the lower retaining pin through the mast supports. Insert the cotter pin through the retaining pin.

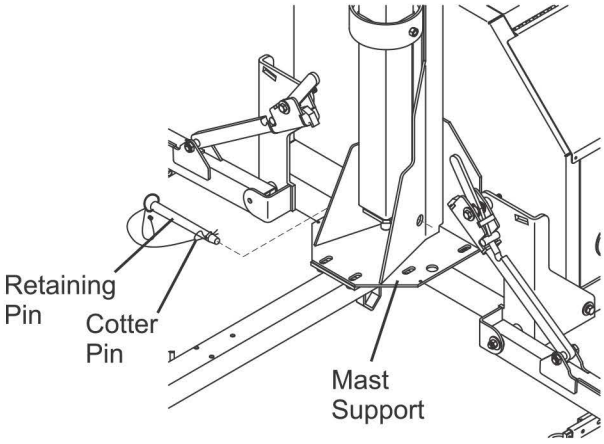

5 Turn the extend/retract winch handle clockwise to extend mast sections.

Mast Rotation

1 Turn the T-handle to release the mast rotation lock.

2 Rotate the mast to the desired position.

3 Tighten the T-handle to secure the mast in the desired position.

4 Before lowering the mast sections, the blue arrows on the mast must be aligned.

5 Release the mast rotation lock and rotate the mast to align the arrows.

6 Tighten the T-handle to secure the mast.

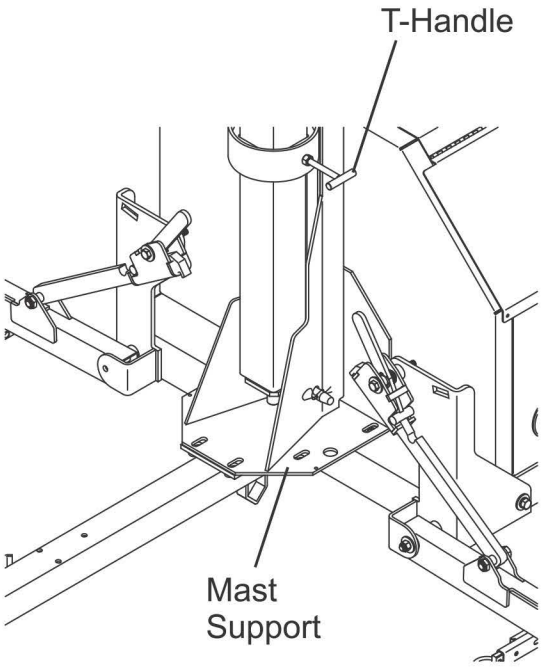

Operating Instructions

Operation of Lights

Note: The engine must be running before the lights are turned on.

1 Be sure the position of the lights is adjusted before raising the mast.

2 Start the engine

3 Turn on the main circuit breaker switches on the control panel.

4 Turn on the lights using the individual light switches.

Note:Lights can take up to 20 minutes to reach full intensity.If the lights are turned off and turned back on again while still warm, they will not light up again for 20 to 30 minutes.

5 Turn the lights off by turning the circuit breaker switches to the off position.

6 Make sure the lights are turned off before engine is shut down.

Grounding

If your light tower has the optional grounding rod, drive the grounding rod into the ground and connect to the grounding lug located on the chassis at the rear of the light tower.

Note: This machine should be grounded in accordance with all local electrical codes. Consult the local electrical codes or authority having jurisdiction in the area where the machine will be used for specific requirements.

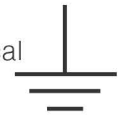

Electrical Outlets

A 120V/20 amp GFI duplex receptacle and a 240V/30 amp T-lock receptacle are located on the control panel inside the light tower cabinet.

Note: Before plugging in auxiliary power cords, feed them up through the trailer frame and attach to the receptacles. Close the cabinet doors to protect the control panel and other components from weather.

Operating Instructions

Towing

1 Make sure the mast is rotated to its original position and secured. Line up the arrows on the front of the mast.

2 Turn the extend/retract winch handle counterclockwise until the mast sections are fully retracted.

3 When the mast sections are fully retracted, remove the cotter pin and the lower retaining pin from the lower mast support.

4 Lower the mast by turning the raise/lower winch counterclockwise.

5 When the mast is fully lowered, insert the upper retaining pin and the cotter pin.

6 Insert the lower retaining pin into the storage hole provided in the mast support and insert the cotter pin.

7 Make sure the covers are closed and secured.

8 Raise the side outrigger jacks and the rear leveling jack. Rotate them into the stowed and secured position.

9 Release the spring pin on the side outriggers and slide the outriggers into the stowed and secured position. Make sure the outriggers are locked in place.

10 Pull the release pin on the side outriggers and raise the outriggers into the stowed and secured position. Rotate the leveling jack into the stowed and secured position.

11 If the optional grounding rod has been used, unearth and remove the grounding rod from the grounding lug and stow securely inside the cabinet.

12 Raise the tongue of the light tower by turning the tongue jack handle.

13 Position the transport vehicle under the coupler on the tongue of the light tower.

14 Open the latch on the coupler.

15 Turn the tongue jack handle to lower the tongue onto the transport vehicle.

16 Close the latch on the coupler.

17 Rotate the tongue jack to the stowed position and secure with the lock pin.

18 Attach the safety chains (if required).

19 Connect and test the trailer lights.

Operating Instructions

Towing Information

Driving a vehicle/trailer combination is different from driving a vehicle alone.

Inspect all connections at each stop.

All tires must be properly inflated. Do not overinflate the tires. Tire pressures go up during driving. Checking the tire pressure when the tires are warm will give you an inaccurate pressure reading.

Increase the distance between your vehicle and the vehicle in front of you to twice the normal following distance when towing a trailer. Allow more following distance in adverse weather.

Slow down for downgrades and shift your transmission into a lower gear.

Slow down for curves, hazardous road conditions, freeway exits, and when driving in adverse weather.

Heavy winds, excessive speed, load shifting or passing vehicles can cause a trailer to sway while driving. If this occurs, do not brake, speed up or turn the steering wheel. Turning the steering wheel or applying the brakes can cause the vehicle and trailer to jackknife. Let up on the gas pedal and keep the steering wheel straight.

If the vehicle and/or trailer travels off the paved road, hold the steering wheel firmly and let up on the gas pedal. Do not apply the brakes. Do not turn sharply. Slow down to under 25 mph / 40 km/h. Gradually turn the steering wheel to get back on the road. Proceed with caution when entering traffic.

When passing other vehicles, be sure to leave enough room for the extra length of the trailer. You will need to go much farther beyond the passed vehicle before you can return to your lane.

Avoid sudden movements when turning.

Transport and Lifting Instructions

Observe and Obey:

- ☑ Larson Electronics provides this securement information as a recommendation. Drivers are solely responsible for making sure machines are properly secured and the correct trailer is selected pursuant to US Department of Transportation regulations, other localized regulations, and their company policy.
- ☑ Larson Electronics customers needing to containerize any Larson Electronics product should source a qualified freight forwarder with expertise in preparing, loading and securing construction and lifting equipment for international shipment.
- ☑ The transport vehicle must be parked on a level surface.
- ☑ The transport vehicle must be secured to prevent rolling while the machine is being loaded.
- ☑ Be sure the vehicle capacity, loading surfaces and chains or straps are sufficient to withstand the machine weight. See the serial label for the machine weight.
- ☑ Common sense and planning must be applied to control the movement of the machine when lifting it with a crane or forklift.

Securing to Truck or Trailer for Transit

Fully retract and lower the mast to the stowed position.

Secure the mast for transport with the travel lock pin.

Fully retract, raise and lock all outriggers.

Close and secure the cabinet doors.

Inspect the entire machine for loose or unsecured items.

Use the four tie-down points for anchoring down to the transport surface.

Use a minimum of four chains to secure the light tower.

Adjust the rigging to prevent damage to the chains.

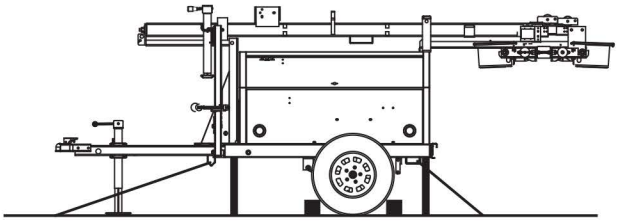

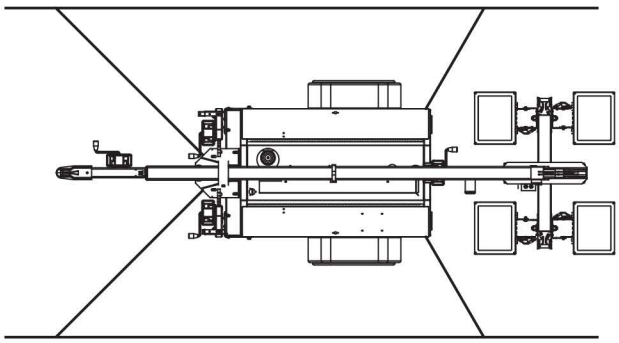

Transport and Lifting Instructions

Observe and Obey:

☑ Only qualified riggers should rig the machine.

☑ Only certified crane operators should lift the machine and only in accordance with the applicable crane regulations.

☑ Be sure the crane capacity, loading surfaces and straps or lines are sufficient to withstand the machine weight. See the serial label for the machine weight.

☑ Lifting the Machine with a Crane

Fully retract and lower the mast to the stowed position.

Secure the mast for transport with the travel lock pin.

Fully retract, raise and lock all outriggers.

Close and secure the cabinet doors.

Use the lifting eye on the mast to lift the machine.

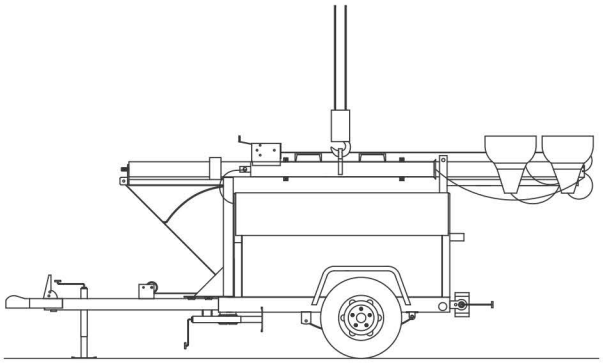

Maintenance



Observe and Obey:

☑ Only routine maintenance items specified in this manual shall be performed by the operator.

☑ Scheduled maintenance inspections shall be completed by qualified service technicians, according to the manufacturer's specifications and the requirements specified in the responsibilities manual.

Maintenance Symbols Legend

The following symbols have been used in this manual to help communicate the intent of the instructions. When one or more of the symbols appear at the beginning of a maintenance procedure, it conveys the meaning below.



Indicates that tools will be required to perform this procedure.



Indicates that new parts will be required to perform this procedure.

Check the Engine Oil Level



Maintaining the proper engine oil level is essential to good engine performance and service life. Operating the machine with an improper oil level can damage engine components.

Note: Check the oil level with the engine off.

1 Check the oil level dipstick. Add oil as needed.

Perkins 403D-11 Engine	
Oil type	15W-40
Oil type - cold conditions	5W-40
Kubota D-1105 Engine	
Oil type	10W-30
Oil type - cold conditions	5W-30

Maintenance

Check the Engine Coolant Level



Maintaining the engine coolant at the proper level is essential to engine service life. Improper coolant level will affect the engine's cooling capability and damage engine components. Daily checks will allow the inspector to identify changes in coolant level that might indicate cooling system problems.

⚠ Burn hazard. Beware of hot engine parts and coolant. Contact with hot engine parts and/or coolant may cause severe burns.

Note: Do not remove the radiator cap.

1 Check the fluid level in the coolant recovery tank. Add fluid as needed.

⊙ Result: The fluid level should be at the FULL mark.

Check the Batteries



Proper battery condition is essential to good machine performance and operational safety. Improper fluid levels or damaged cables and connections can result in component damage and hazardous conditions.

⚠ Electrocution hazard. Contact with hot or live circuits may result in death or serious injury. Remove all rings, watches and other jewelry.

⚠ Bodily injury hazard. Batteries contain acid. Avoid spilling or contacting battery acid. Neutralize battery acid spills with baking soda and water.

1 Put on protective clothing and eye wear.

2 Be sure that the battery cable connections are tight and free of corrosion.

Be sure that the battery hold-down brackets are in place and secure.

Note: Adding terminal protectors and a corrosion preventative sealant will help eliminate the corrosion on the battery terminals and cables.

Maintenance

Check the Tire Pressure



- ⚠ Bodily injury hazard. An over-inflated tire can explode and may cause death or serious injury.
- ⚠ Collision hazard. An excessively worn tire can cause poor handling and continued use could result in tire failure.
- ⚠ Tip-over hazard. Do not use temporary flat tire repair products.

Maintaining the tires and wheels in good condition is essential to safe operation and good performance. Tire and/or wheel failure could result in a machine tip-over. Component damage may also result if problems are not discovered and repaired in a timely fashion.

1 Check the tire surface and sidewalls for cuts, cracks, punctures and uneven or excessive tread wear. Replace the tire if uneven or excessive tread wear is found.

2 Check each wheel for damage, bends and cracks. Replace the wheel if any damage is found.

Note: Tires and wheels must be replaced with tires and wheels of the specifications listed.

3 Check each tire with an air pressure gauge. Add air as needed.

4 Check the torque of each lug nut.

Tire Specifications, U.S.		
Tire Size	ST175/80D13	Load B
Lug nut torque	80 ft/lbs	108 Nm
Tire pressure (cold)	35 psi	241 kpa

Scheduled Maintenance

Maintenance performed quarterly, annually and every two years must be completed by a person trained and qualified to perform maintenance on this machine according to the procedures found in the service manual for this machine.

Machines that have been out of service for more than three months must receive the quarterly inspection before they are put back into service.

Specifications

WCDE-4

Height, stowed	5 ft 9.5 in	1.765 m
Length, stowed	14 ft 2 in	4.331 m
Width, stowed	4 ft 6 in	1.372 m
Extended mast height	30 ft	9.114 m
Weight WCDE-4-8X160WSA-LED	1750 lbs	794 kg
(Machine weights vary with option configurations. See serial label for specific machine weight.)		
Maximum tongue weight	199 lbs	91 kg
Tire size, U.S.	ST175/80D13	Load B
Engine type	Kubota	13.6 HP
	Perkins	13.8 HP
Fuel capacity	30 gallons	114 liters
Run time	Kubota	38.3 hours
	Perkins	37.9 hours
Generator	Marathon 6 kW, 60 Hz	
Total lighting wattage Four lights		4000 watts
Replacement bulbs		1000 watts Type BT-37 Metal Halide
Tower rotation		359 degrees non-continuous
Maximum towing speed	60 mph	97 km/h
Maximum wind speed	62 mph	100 km/h
Sound level (dba rating)	71 dba @	23 ft / 7 m

Continuous improvement of our products is a Terex policy. Product specifications are subject to change without notice or obligation.

Reporting Safety Defects

Larson Electronics
9419 E US Highway 175
Kemp, Texas 75143

Reporting Safety Defects

If you believe that your vehicle has a defect which could cause a crash or could cause injury or death, you should immediately inform the National Highway Traffic Safety Administration (NHTSA) in addition to Larson Electronics.

If NHTSA receives similar complaints, it may open an investigation, and if it finds that a safety defect exists in a group of vehicles, it may order a recall and remedy campaign. However, NHTSA cannot become involved in any individual problems between you, your dealer or Larson Electronics.

To contact NHTSA you may either call the Auto Safety Hotline toll-free at 1-800-424-9393 (366-0123 in Washington DC area) or write to:

NHTSA
U.S. Department of Transportation
400 7th Street SW, (NSA-11)
Washington DC 20590

You can also obtain information about motor vehicle safety from the Hotline.

California Proposition 65

Warning

The exhaust from this product contains chemicals known to the State of California to cause cancer, birth defects or other reproductive harm.

Towing Checklist (use at each stop)

Before Towing

- Travel lock is securely locked in place
- Towing hitch is properly secured to tow vehicle
- Safety chans (if required) are properly attached and secure (chains are crossed below hitch)
- All lights are connected and working
- Tires are properly inflated

Before Driving

- Fasten safety restraints
- Properly adjust mirrors

On the Road

- Do not exceed 60 mph / 97 km/h. Obey all local and national towing speed laws
- Check connections and tire pressure at each stop
- Slow down for hazardous conditions
- Allow extra distance for following and passing other vehicles

IDCMR-IP-POE-PTZ-20X PTZ Dome Camera Installation Guide



PLEASE READ THIS MANUAL BEFORE USING YOUR CAMERAS, and always follow the instructions for safety and proper use. Save this manual for future reference.

CAUTION

FCC Caution: *To assure continued compliance, use only shielded interface cables when connecting to computer or peripheral devices. Any changes or modifications not expressly approved by the party responsible for compliance could void the user's authority to operate this equipment.*

NOTE

This equipment has been tested and found to comply with the limits for a Class "A" digital device, pursuant to Part 15 of the FCC Rules. These limits are designed to provide reasonable protection against harmful interference when the equipment is operated in a commercial environment. This equipment generates, uses, and can radiate radio frequency energy and, if not installed and used in accordance with the instruction manual, may cause harmful interference to radio communications.

LEGAL NOTICE

Observint Technologies (**Observint**) products are designed to meet safety and performance standards with the use of specific Observint authorized accessories. Observint disclaims liability associated with the use of non-**Observint** authorized accessories.

The recording, transmission, or broadcast of any person's voice without their consent or a court order is strictly prohibited by law.

Observint makes no representations concerning the legality of certain product applications such as the making, transmission, or recording of video and/or audio signals of others without their knowledge and/or consent. We encourage you to check and comply with all applicable local, state, and federal laws and regulations before engaging in any form of surveillance or any transmission of radio frequencies.

Microsoft, **Windows**, and **Internet Explorer** are either registered trademarks or trademarks of Microsoft Corporation in the United States and/or other countries.

Other trademarks and trade names may be used in this document to refer to either the entities claiming the marks and names or their products. **Observint** disclaims any proprietary interest in trademarks and trade names other than its own.

No part of this document may be reproduced or distributed in any form or by any means without the express written permission of Observint, Inc.

Regulatory information

FCC information

FCC compliance: This equipment has been tested and found to comply with the limits for a digital device, pursuant to part 15 of the FCC Rules. These limits are designed to provide reasonable protection against harmful interference when the equipment is operated in a commercial environment. This equipment generates, uses, and can radiate radio frequency energy and, if not installed and used in accordance with the instruction manual, may cause harmful interference to radio communications. Operation of this equipment in a residential area is likely to cause harmful interference in which case the user will be required to correct the interference at his own expense.

FCC conditions

This device complies with part 15 of the FCC Rules. Operation is subject to the following two conditions:

1. This device may not cause harmful interference.
2. This device must accept any interference received, including interference that may cause undesired operation.

Preventive and Cautionary Tips

Before connecting and operating your cameras, please be advised of the following:

- Ensure environmental conditions meet factory specifications.
- Major shocks or jolts to the unit as a result of dropping it may cause damage to the sensitive electronics within the unit.
- Use the device in conjunction with an UPS if possible.

Safety Instructions

These instructions are intended to ensure that user can use the product correctly to avoid danger or property loss.

The precaution measure is divided into Warnings and Cautions:

- **Warnings**: Neglecting any of the warnings may cause serious injury or death.
- **Cautions**: Neglecting any of the cautions may cause injury or equipment damage.

Warnings

- All the electronic operation should be strictly compliance with the electrical safety regulations, fire prevention regulations and other related regulations in your local region.
- Do not connect several devices to one power adapter as adapter overload may cause over-heat or fire hazard.
- Please make sure that the power has been disconnected before you wire, install or dismantle the camera.

- If smoke, odors or noise rise from the device, turn off the power at once and unplug the power cable, and then please contact the service center.
- If the product does not work properly, please contact your dealer or the nearest service center. Never attempt to disassemble the speed dome yourself. (We shall not assume any responsibility for problems caused by unauthorized repair or maintenance.)

Cautions

- Do not drop the dome or subject it to physical shock, and do not expose it to high electromagnetism radiation. Avoid the equipment installation on vibrations surface or places subject to shock (ignorance can cause equipment damage).
- Do not place the dome in extremely hot, cold, dusty or damp locations, otherwise fire or electrical shock will occur. The operating temperature should be -22 °F ~ 149 °F (-30 °C ~ 65 °C).
- The dome cover for indoor use shall be kept from rain and moisture.
- Exposing the equipment to direct sun light, low ventilation or heat source such as heater or radiator is forbidden (ignorance can cause fire danger).
- Do not aim the speed dome at the sun or extra bright places. A blooming or smear may occur otherwise (which is not a malfunction however), and affecting the endurance of sensor at the same time.
- Please use the provided glove when open up the dome cover, avoid direct contact with the dome cover, because the acidic sweat of the fingers may erode the surface coating of the dome cover.
- Please use a soft and dry cloth when clean inside and outside surfaces of the dome cover, do not use alkaline detergents.
- Please keep all packaging for future use. In case of a failure, use the original packaging to return the camera to the factory. Transportation without the original packaging may result in damage to the camera and incur additional costs.

Read these instructions and keep them in a safe place for future reference.

- Please refer all work related to the installation of this product to qualified service personnel or system installers.
- Do not operate the camera outside of its specified temperature, humidity or power source ratings.
- Install the unit away from heat sources such as radiators, heat registers and stoves.
- Installation of the unit near consumer electronics devices, such as stereo receiver/amplifiers and televisions, is permitted as long as the air surrounding the terminal does not exceed the above mentioned temperature range.
- Handle the camera with care. Do not drop or shake, as this may damage it.
- Do not use strong or abrasive detergents when cleaning the surfaces of this product. When dirt is hard to remove, use a mild detergent and wipe gently.
- Save your system configuration.
- Distributing, copying, disassembling, reverse compiling, reverse engineering, and exporting, in violation of export laws, the software provided with this product is expressly prohibited.

Table of Contents

SECTION 1 **Overview 1**

1.1 Features 1

1.2 What's in the box 3

1.3 Accessories 3

SECTION 2 **Installation 8**

2.1 Remove the camera from the packaging 8

2.2 Install an micro-SD card in the camera 9

2.3 Camera wall mount installation 10

2.4 Ceiling mounting 11

2.5 Connecting the cables 12

SECTION 3 **Configure Network Access 16**

SECTION 4 **Remote login 19**

4.1 Additional configuration steps 23

APPENDIX A **Specifications 24**

APPENDIX B **Definitions 26**

APPENDIX C **Lightning and Surge Protection 28**

APPENDIX D **24 Vac Wire Gauge and Transmission Distance 29**

NOTES

SECTION 1
Overview

Congratulations on purchasing your new IP PTZ camera! This installation guide includes procedures for installing and performing the initial setup of the camera.

The PTZ Dome Camera can capture high quality images in low light environment with its black anti-reflective glass. The black anti-reflective glass increase the luminousness for an IR reach of up to nearly 500 feet. Embedded with a 1/2.8'' progressive scan CMOS chip makes DWDR 2MP real-time resolution possible. With the 20× optical zoom Day/Night lens, the camera offers more details over expansive areas. This camera also features a wide range of functions, including intrusion detection, line crossing detection and audio exception, benefitting users with great improvement on security efficiency, more importantly, with key events / objects being recorded for further forensic needs.

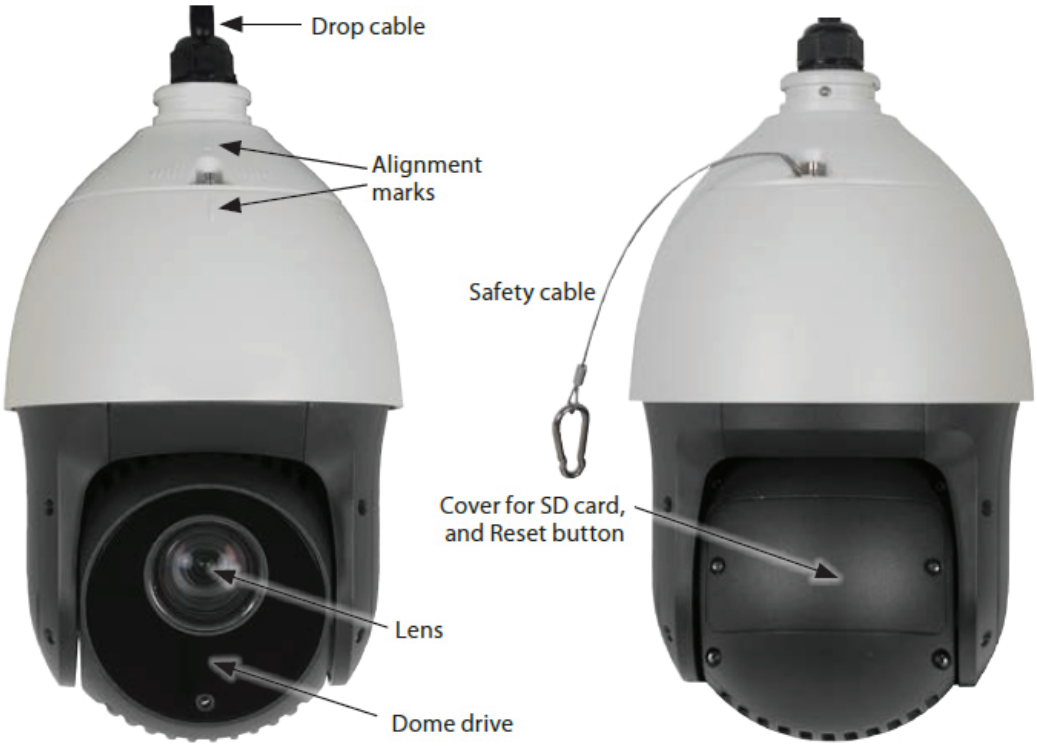

1.1 Features

Basic functions

- High performance sensor, up to 1920 x 1080 resolution
- ±0.1° Preset accuracy
- ONVIF (Open Network Video Interface Forum), CGI (Common Gateway Interface), PSIA (Physical Security Interoperability Alliance), to ensure greater interoperability between different platforms and compatibility

- 3D intelligent positioning function
- Power-off memory function: restore PTZ & lens status after reboot
- IP66 compliant

Functions

- Detections: intrusion detection, line crossing detection, audio exception detection, motion detection
- Recording: edge recording, support smart search in smart NVR
- Support low bit rate, ROI

Camera function:

- Auto iris, auto focus, auto white balance, backlight compensation and auto day & night switch
- Min. Illumination: 0.02 Lux @ (F2.0, AGC ON) (Color), 0.002 Lux @ (F2.0, AGC ON) (B/W)
- Supports 8 privacy masks

PTZ function:

- 360° endless pan range and -15° ~ +90° tilt range
- 400°/s Pan Preset Speed and 200°/s Tilt Preset Speed
- 0.1° ~ 400°/s Manual Pan Speed and 0.1° ~ 200°/s Manual Tilt Speed
- 300 programmable presets; preset image freezing capability
- 8 patrols, up to 32 presets per patrol

Network function:

- H.264/ MJPEG video compression and the latest processing chip and platform
- Built-in web server
- Support Micro SD card local storage, up to 128GB
- Support up to 8 NAS storage; transmit videos from the SD card to the NAS after network recovery
- HTTPS encryption and IEEE 802.1X port-based network access control
- Support dual-stream; H.264/ MJPEG video compression; basic and advanced video configuration; real time video at 1080P
- Multiple network protocols supported: IPv4/IPv6, HTTP, HTTPS, 802.1X, QoS, FTP, SMTP, UPnP, SNMP, DNS, DDNS, NTP, RTSP, RTP, TCP, UDP, IGMP, ICMP, DHCP, PPPoE
- 1 audio input and 1 audio output
- 2 alarm inputs and 1 alarm output, alarm linkage support preset, patrol, pattern, recording, relay output, upload center, etc.

IR function:

- 0 Lux minimum illumination
- Up to 492 ft IR distance
- IR light MTBF reaching up to 30,000 hours
- Smart IR mode

1.2 What's in the box

Your camera includes:

- PTZ camera assembly
- Pendant adapter
- Ethernet drop cable seal kit
- Hi-Power PoE injector
- Gloves
- Hex L-wrench
- Thread tape
- Quick installation guide (this document)



Pendant adapter

SECTION 2
Installation

Before you start

- Check the package contents and make sure that the device in the package is in good condition and all the assembly parts are included:
  - PTZ camera assembly
  - Pendant adapter
  - Thread tape
  - Hi-Power PoE injector
  - Gloves
  - Hex L-wrench
  - Quick installation guide (this document)
- Make sure the mounting surface and fasteners are strong enough to withstand at least 8 times the weight of the camera assembly and the mounting bracket.
- For cement walls, use an expansion screw to secure the mounting bracket.

CAUTION

Do not carry the camera by the drop cable.



For outdoor installations, refer to "APPENDIX C Lightning and Surge Protection" on page 28 for additional installation considerations.

2.1 Remove the camera from the packaging

1. Remove the camera from the protective packaging.
2. Remove tape from the dome drive, if attached.

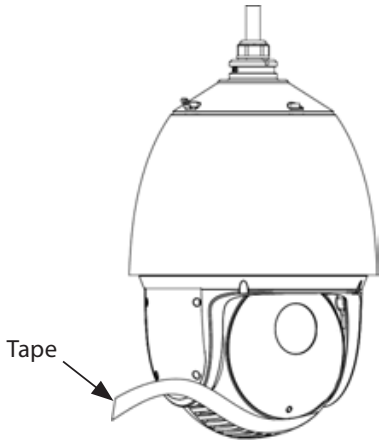

2.2 Install an micro-SD card in the camera

The micro-SD card in the provides in-camera (local) storage for log information and locally stored video and capture files. Cameras without an SD card cannot provide camera log information, which is valuable for maintenance purposes. Your camera will accommodate a micro-SD card with up to 128 GB of storage. The location of the micro-SD card slot is shown below.

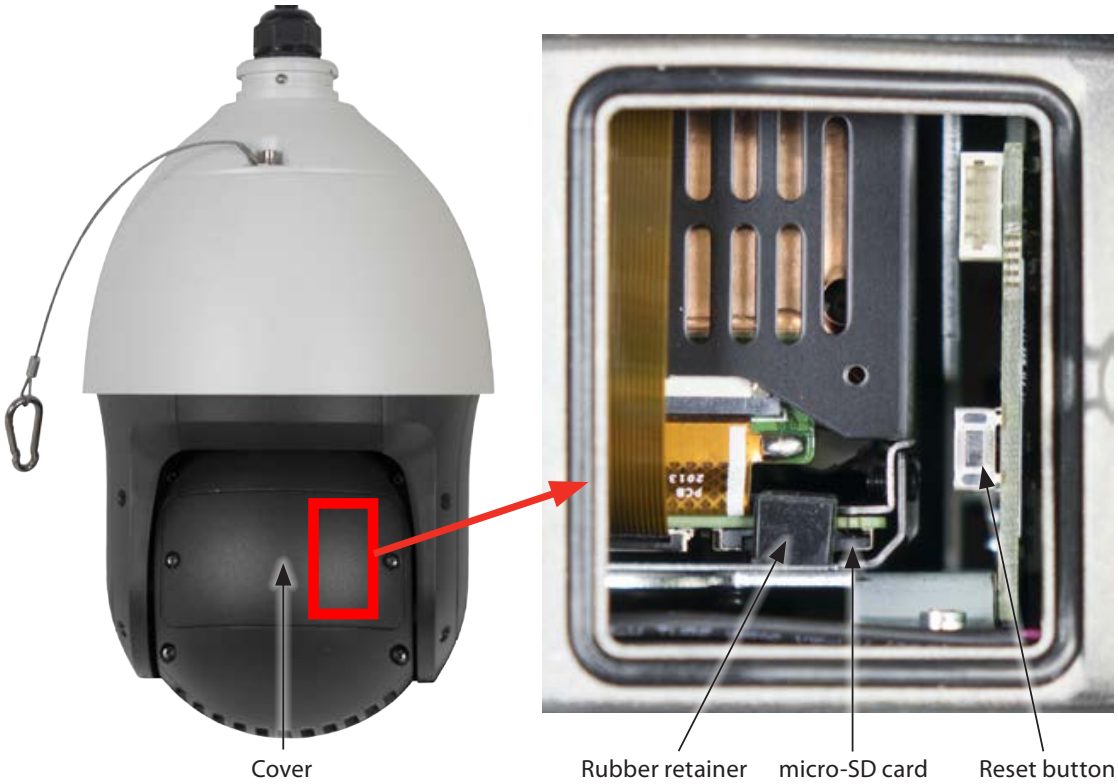

1. Use a Phillips #2 screw driver to remove the back cover of the camera. See the photo above.
2. Insert the micro-SD card into the card slot until it clicks into place.
3. Pull the rubber retainer out and over the edge of the micro-SD card and PC board it attaches to.
4. Reattach the back cover.

2.3 Camera wall mount installation

Following the instructions below to install the camera using the **Wall Mount Bracket**.

Instructions for mounting the camera with a **Pole Mount PTZ Bracket** or **Corner Mount PTZ Bracket** are very similar.

For these brackets, use the instructions below as a guide. .

1. Determine the best mounting screws and hardware to anchor the mounting bracket with the camera to the mounting surface. Use the following guidelines:
   - For cement wall mounting, use the expansion screw to anchor the bracket.
   - For wooden wall mounting, use self-tapping screw to anchor the bracket.
   - Make sure that the wall is strong enough to withstand more than **8 times** the weight of the camera and the bracket.
2. Using the mounting bracket as a template, mark the location of the mounting screw holes on the mounting surface. Also mark the location of a hole for the camera drop cable. The drop cable will be routed through the mounting bracket and through the mounting surface.
3. Drill holes in the mounting screws and hardware. Also, drill a 1½" diameter hole in the mounting surface for the drop cable.
4. Apply two wrap of the thread tape provided onto the treads of the pendant adapter (see below)

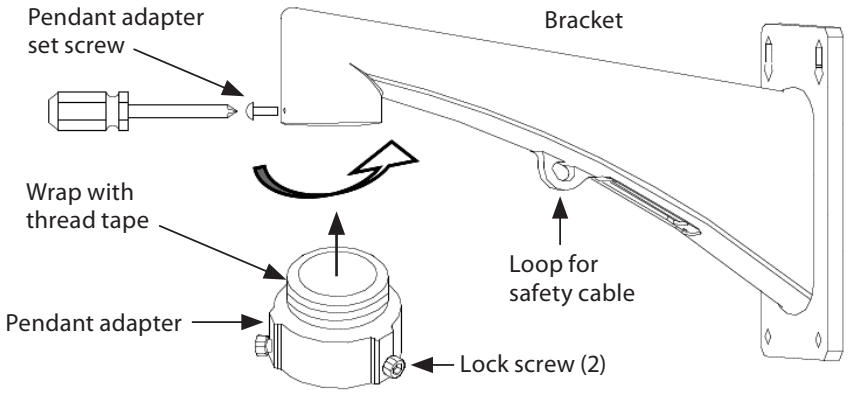

Attach pendant adapter to mounting bracket

5. Screw the pendant adapter onto the end of the mounting bracket. Tighten the set screw to secure the adapter to the bracket.

6. Clip the safety cable to the loop on the camera mounting bracket.

7. Route the camera drop cable through the mounting bracket, then clip the safety cable onto the loop in the mounting bracket.

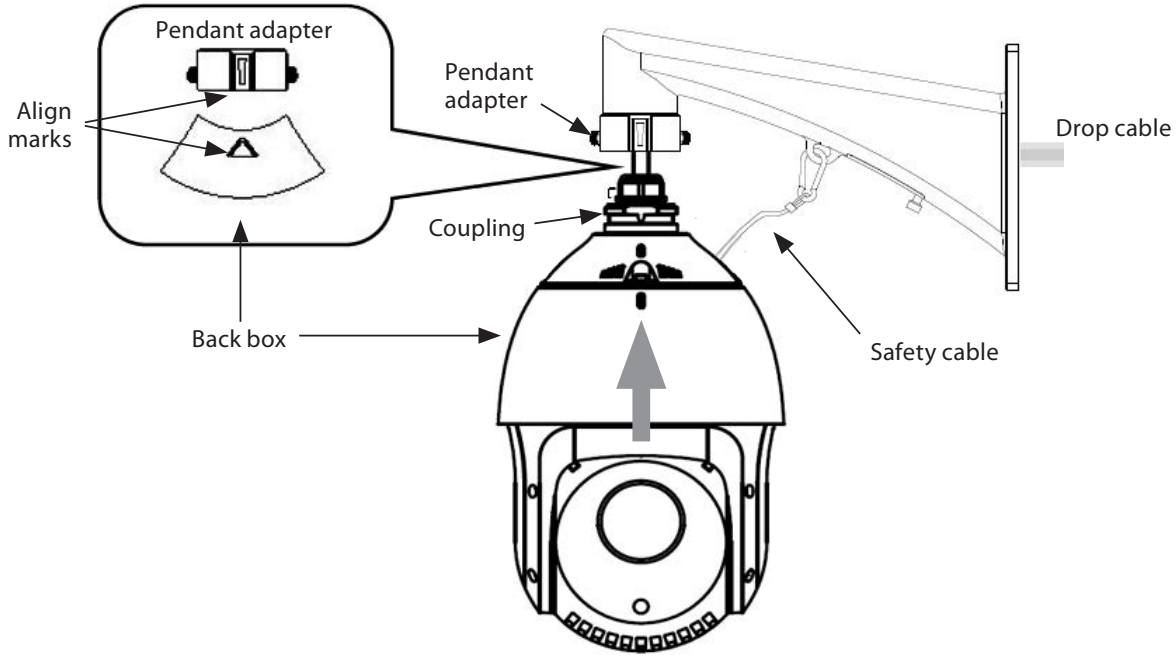

8. Fit the camera coupling into the pendant adapter, then twist the camera to align the marks on the pendant adapter and the camera back box. See the figure above.

9. Tighten the two lock screws on the pendant adapter to secure the camera to the mounting bracket.

10. Feed the camera drop cable through hole drilled at the mounting location, then anchor the mounting bracket to the wall.

2.4 Ceiling mounting

Following the instructions below to install the camera using the **Ceiling Mount Bracket**.

1. Determine the best mounting screws and hardware to anchor the mounting bracket with the camera to the mounting surface. Use the following guidelines:
   - For cement ceiling mounting, use the expansion screw to anchor the bracket.
   - For wooden ceiling mounting, use self-tapping screw to anchor the bracket.
   - Make sure that the ceiling is strong enough to withstand more than **8 times** the weight of the camera and the bracket.

2. Using the mounting bracket as a template, mark the location of the mounting screw holes on the ceiling.

3. If the camera drop cable will be routed through the ceiling, mark the location of a hole for the camera drop cable. The drop cable will be routed through the mounting bracket and can be routed either through the mounting surface or out the side of the mounting bracket.

4. Drill holes in the mounting screws and hardware. Also, drill a 1½" diameter hole in the mounting surface for the drop cable.

5. Clip the safety cable to the loop on the camera mounting bracket.

6. Route the camera drop cable through the mounting bracket, then clip the safety cable onto the loop in the mounting bracket.

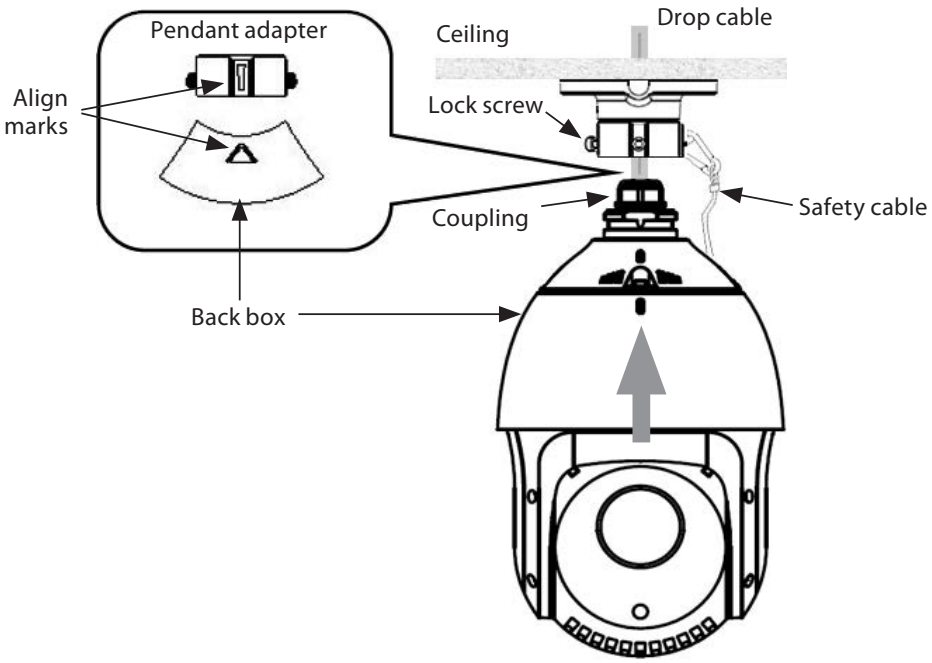

7. Fit the camera coupling into the ceiling mounting bracket, then twist the bracket to align the marks on the bracket and the camera back box. See the figure above.

8. Tighten the two lock screws on the ceiling bracket to secure the camera to the mounting bracket.

9. Feed the camera drop cable through hole drilled at the mounting location, then anchor the mounting bracket to the ceiling.

2.5 Connecting the cables

Drop cables connectors for the IDCMR-IP-POE-PTZ-20X are shown below. Each wire is labeled with its purpose.

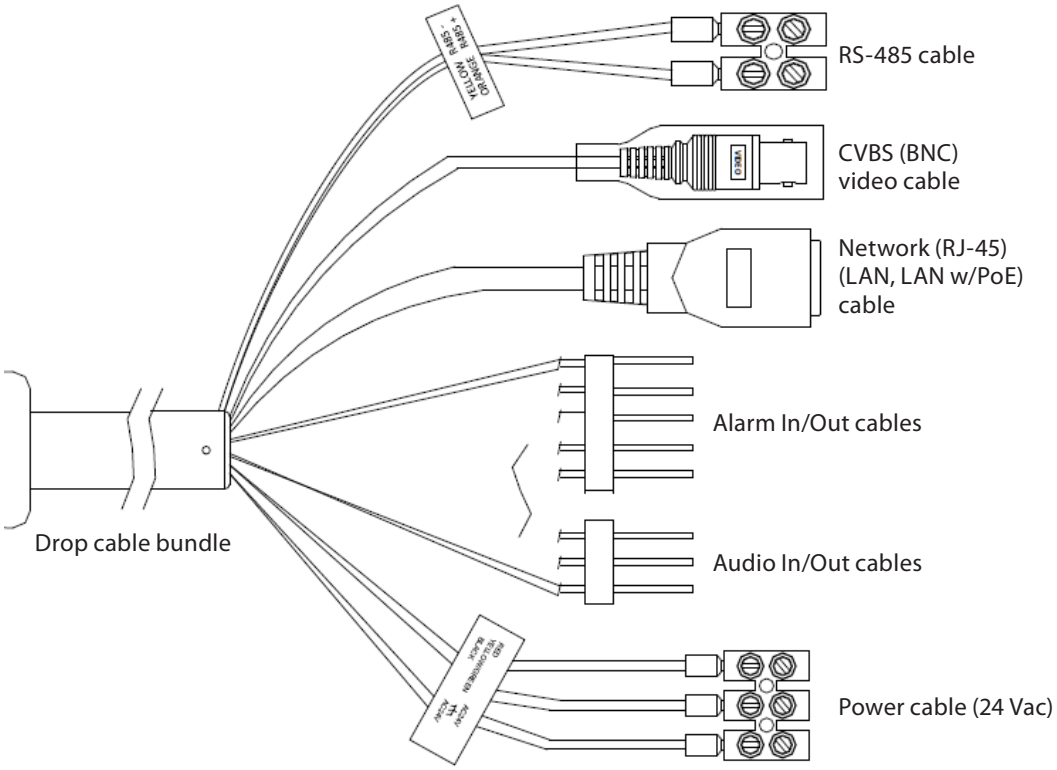

Connect the camera to other devices as needed in the order shown below.

Alarm Input/Output cables

The alarm input/output drop cable bundle provides five wires, ALARM_IN1, ALARM_IN2, ALARM_OUT1, ALARM_COM1 and ALARM_GND. These wires are color coded and labeled.

These connection use the ALARM_IN1 and ALARM_GND wires for alarm input 1, and ALARM_IN2 and ALARM_GND wires for alarm input 2. Alarm inputs normally connect normally open (NO) or normally closed (NC) sensor contacts. The normal contact state is configurable in the camera setup menus.

Connect the camera alarm output drop cables to an alarm reporting device. See the Specifications section for interface requirements and the diagram below. These connection use the ALARM_OUT1 and ALARM_COM1 wires.

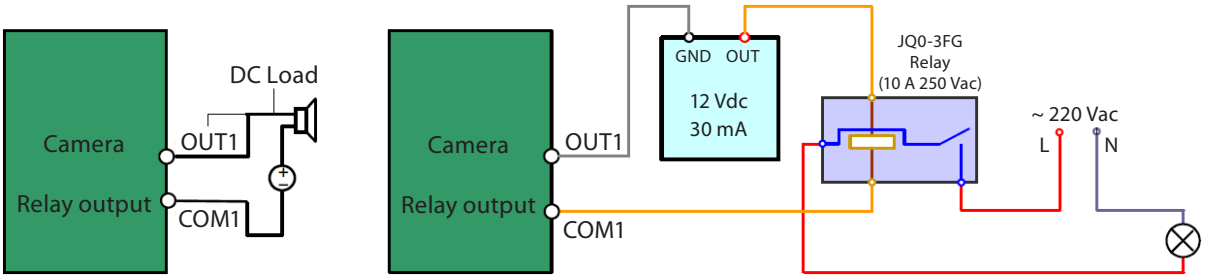

The alarm output provides the relay output (no voltage). An external power supply is required when it connects to the alarm device. With a DC power supply (left diagram), the input voltage must be no more than 12 Vdc, 30 mA. For AC power supply (right diagram), the external relay must be used to prevent damages to the camera and avoid the risk of electric shock.

Audio cable

The Audio drop cable provides three wires: AUDIO_OUT, AUDIO_IN and AUDIO_GND (ground). These wires are color coded and labeled.

Connect the AUDIO_IN and AUDIO_GND wires to a line level audio input source. The input signal must be 2 ~ 2.4 Vp-p at 1 KΩ ± 10% input impedance.

Connect the AUDIO_OUT and AUDIO_GND wires to a line level audio receiver (impedance 600 Ω).

RS-485 cables

Connect the RS485+ and RS485- drop cable wires to an RS-485 controller or an NVR with an RS-485 network interface. PTZ features can also be controlled through the camera network (browser) interface, and through a supported NVR PTZ control panel. These wires are color coded and labeled.

Video cables

The video drop cable provides a BNC connector with a CVBS signal for connection to any compatible monitor. The feature is useful for maintenance and for showing the live view display on a local monitor.

Network (LAN) cable

Connect the network LAN drop cable to a router (switch) through an Ethernet drop cable with an RJ-45 connector. If the drop cable RJ-45 connector is exposed to moisture or dust, apply the Ethernet drop cable seal kit provided. In some network configurations, the LAN cable can connect directly to a Network Video Recorder (NVR) with a built-in network switch.

Power cables

You can power the camera directly by applying 24 Vac power to the drop cable power screw-down connectors. Refer to "APPENDIX D 24 Vac Wire Gauge and Transmission Distance" on page 29 for more information.

The LAN cable can also provide Hi-PoE to the camera. A Hi-PoE injector is provided. A typical PoE injector is shown below.

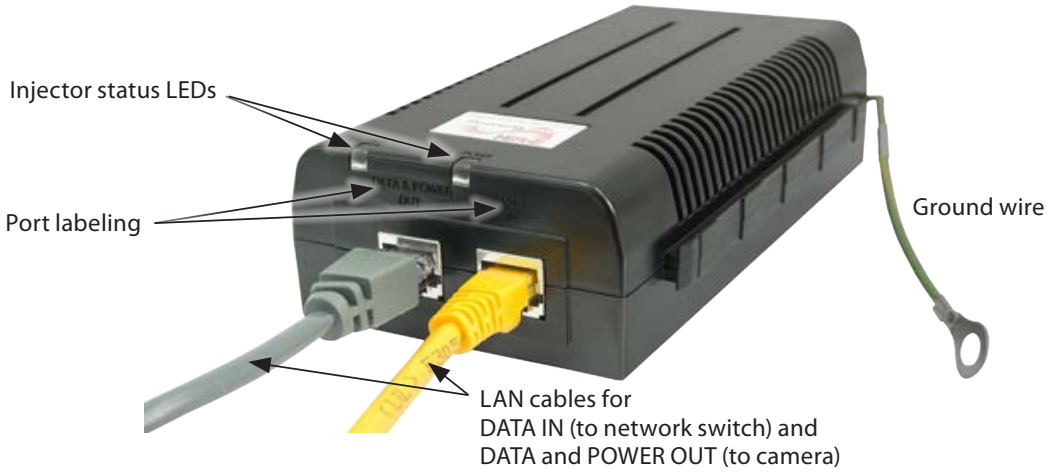

To use the injector:

1. Connect the injector ground wire to an earth ground terminal. (**NOTE**: Not all PoE injectors have a ground wire.)
2. Connect a LAN drop cable between the network switch and the DATA IN port on the injector.
3. Connect a LAN drop cable between the injector DATA and POWER OUT port and the camera LAN drop cable.
4. Plug the power cable provided (not shown) for the PoE injector into the jack on the injector, then into a standard 120 Vac electrical outlet.

After power is applied to the camera, the camera will perform initial motion checks. Allow these motion checks to complete before continuing (~ 1 minute).

SECTION 3
Configure Network Access

After the camera is powered on, an initial network configuration setup should be performed. This procedure includes:

- Installing SADP Tools
- Setting up the camera network configuration

Step 1. Install SADP Tool

SADP Tool Utility is a collection of useful software programs for use with your IP based cameras and recorders. Within the tool set is the **Discovery Tool** a software utility used to "discover" IP cameras and NVRs/DVRs installed on the LAN and change their network parameters. Use Discovery Tool to setup your camera on a network. See below.
Download: https://www.larsonelectronics.com/images/upload/SADPTool.zip

Tools Utility is provided on the SADP Tool.
Use the Tools Utility Installation and User Manual, and embedded in the **SADP software.**

1. Install the Tools Utility on a PC with access to the LAN where your camera is connected. When the program opens, the following screen appears.

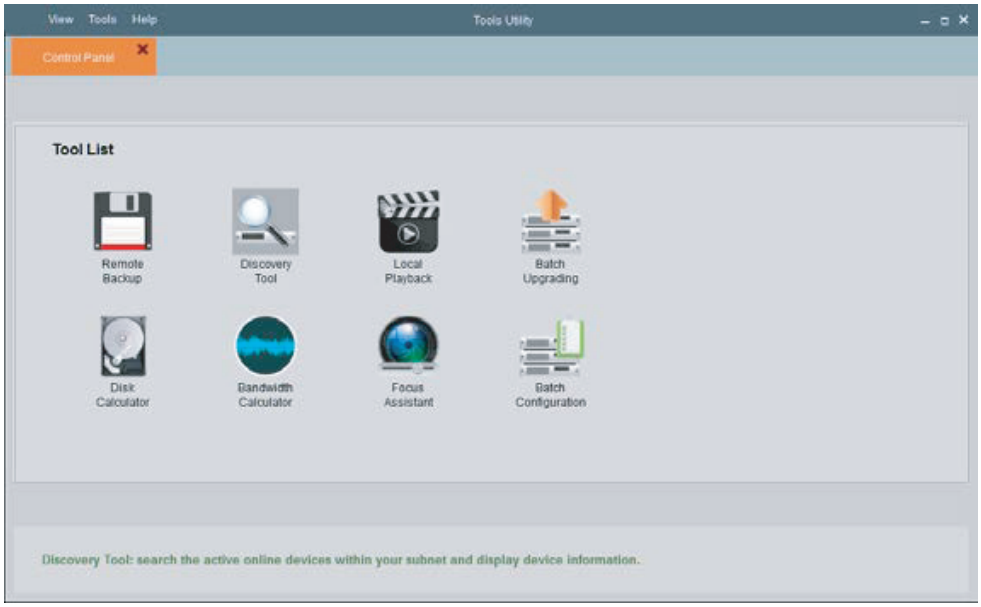

2. Double click the **Discovery Tool** icon to open the program. When the program opens it will automatically list the cameras and recorders installed on the network.

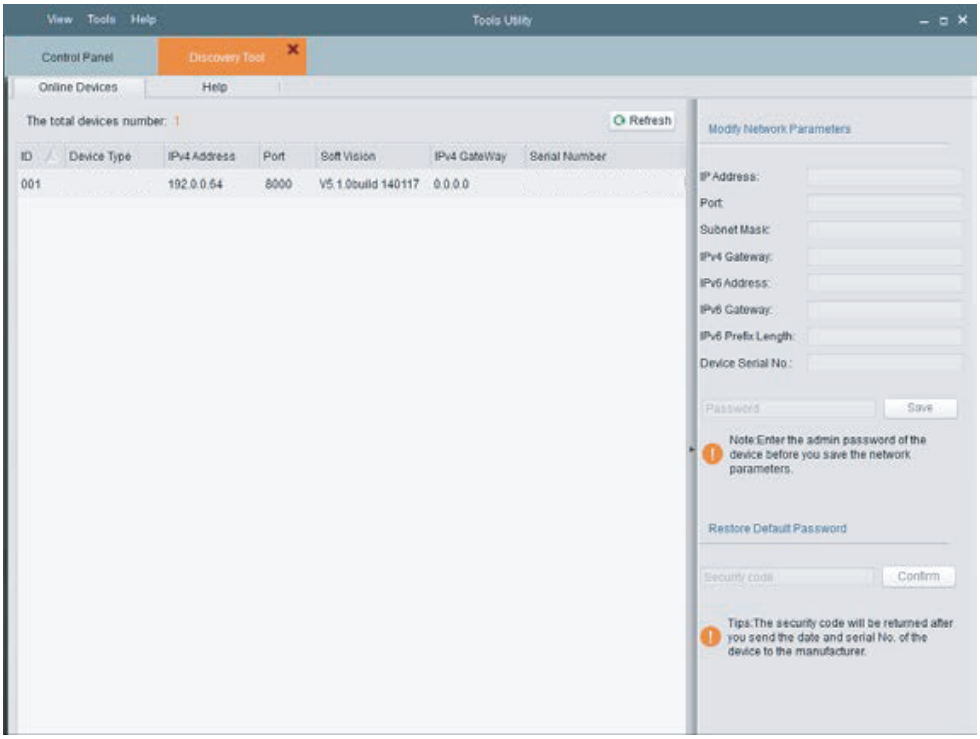

3. To change the network settings of the camera to be compatible with the subnet where it is installed, do the following:

   a. Click the device to highlight it. Notice that the network parameters are shown in the right frame.

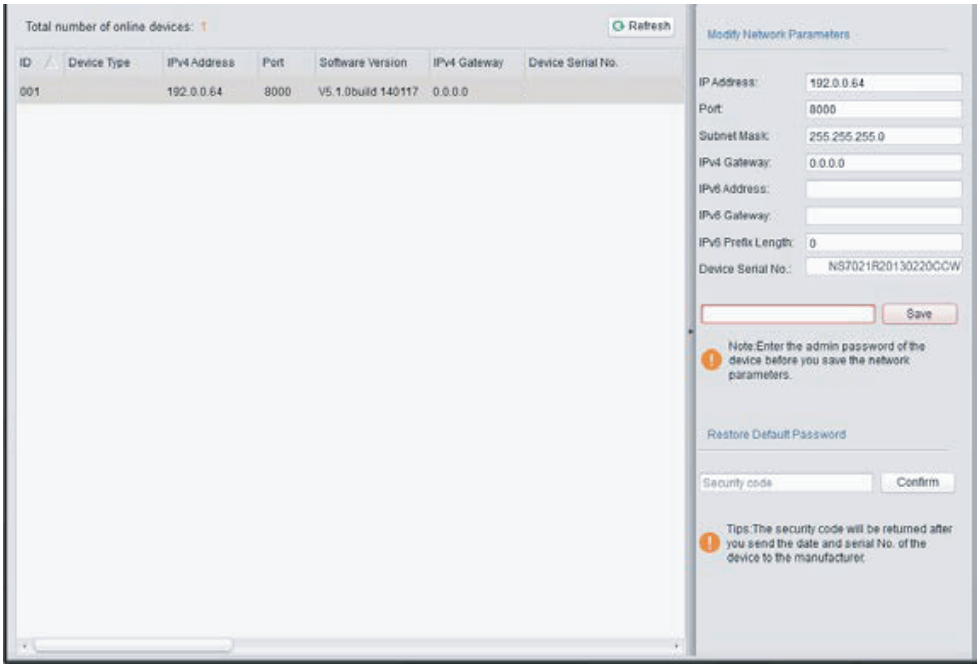

b. Modify the network parameters to values compatible with the subnet where it is installed.

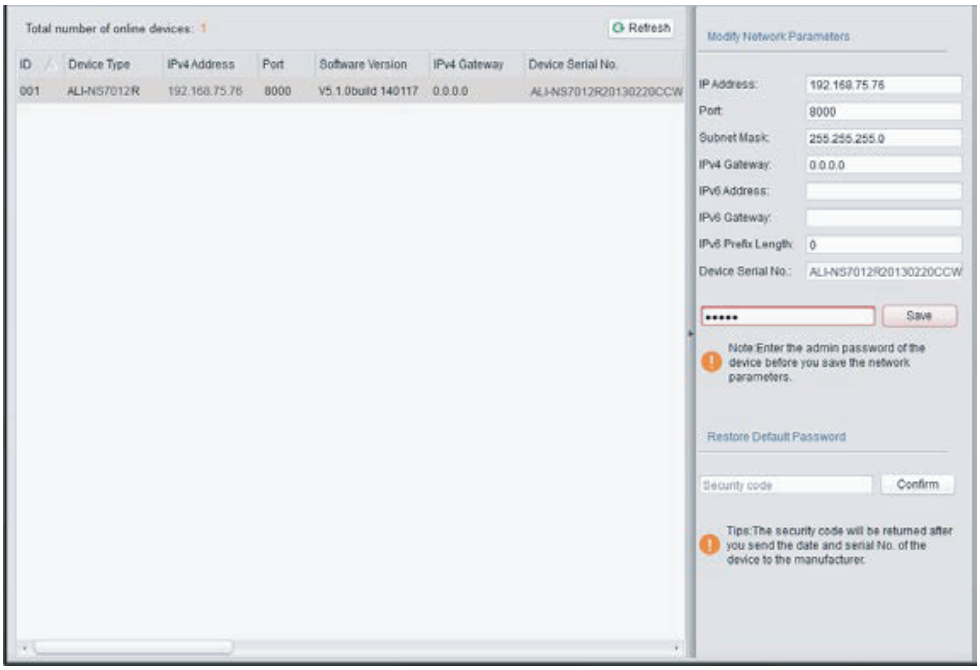

c. Enter the **admin** password for the device in the password field. The default **admin** user password for is **ChangeMeNØw**

d. Click the **Save** button. The new IP address, port, etc. parameters will appear in the list with the device you modified.

3. Close the Tool Utility by clicking the **Close** icon (☒) in the upper-right corner of the window.

SECTION 4
Remote login

To access the camera from a computer on the LAN:

1. Open your Microsoft Internet Explorer browser on your compute and enter the IP address of the camera in the URL field. In the example below, the IP address of the camera is 192.168.75.18.

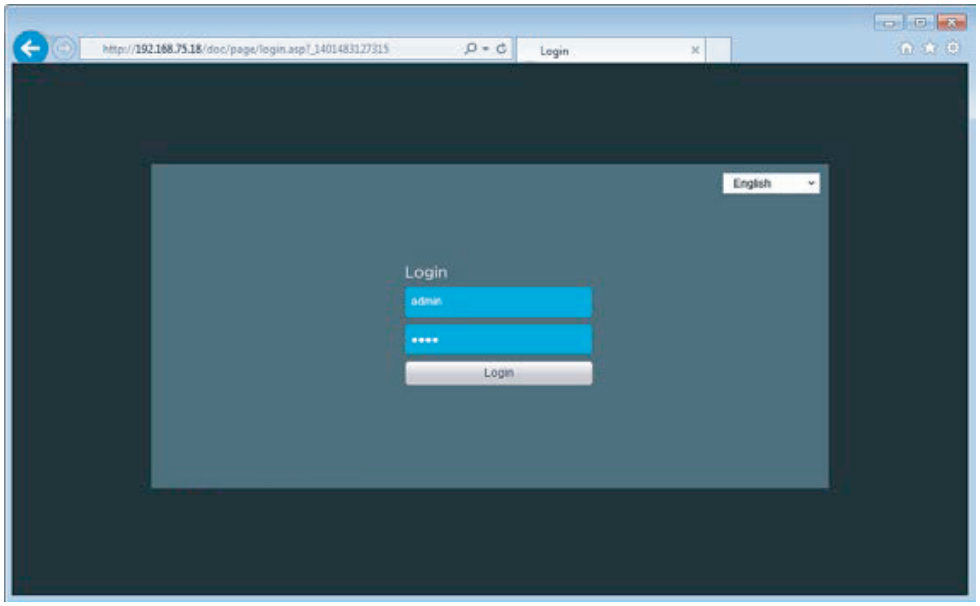

2. In the login window, enter your **User Name** and **Password** in the appropriate fields, then click **Login**. The default **User Name** and **Password** for cameras is **admin** and **ChangeMeN0w**

3. If this is the first time you are logging into the camera at this IP address AND you are using Internet Explorer 10 or newer, you must configure IE for Compatibility mode:

    a. In Internet Explorer, click the Tools icon (located to the right of the tabs), then select Compatibility View settings from the drop-down menu.

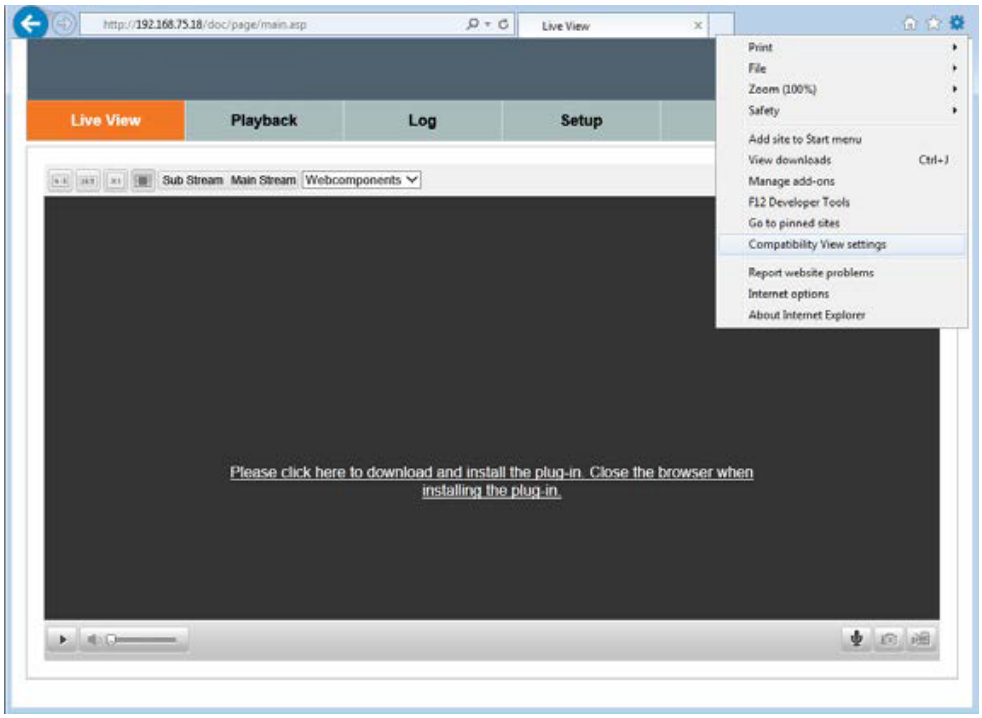

b. In the Compatibility View Settings window, ensure that the IP address of your camera is in the **Add this website** field, then click **Add**.

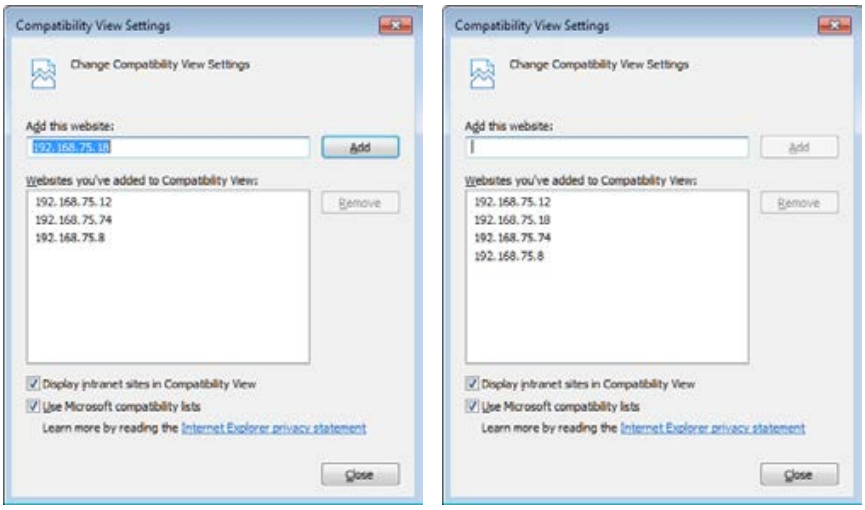

c. After clicking **Add**, the IP address will appear in the Websites list. Click **Close**.

d. If a message on the screen requesting that you install a plug-in (see below), click on the message and continue with the following sub-steps. A message box will appear at the bottom of the window to install the WebComponents plug-in. Otherwise, continue with step "4. In the Live View window shown below, click the PTZ button to open/close the PTZ control panel." on page 22.

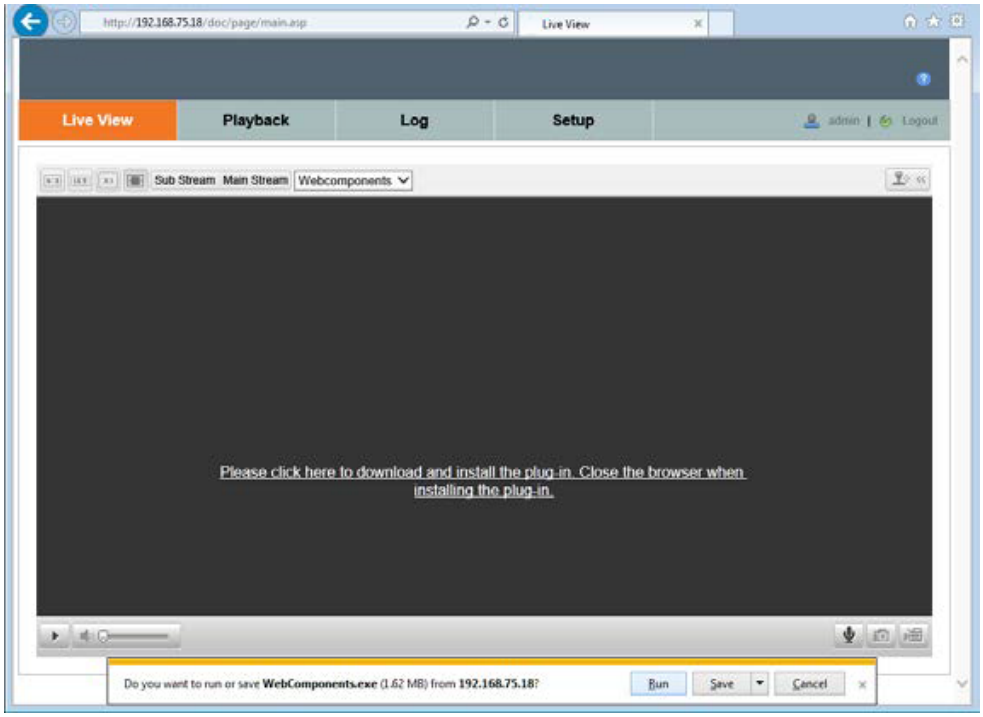

e. In the message box, click **Run** to install WebComponents.exe. The following pop-up window will open. When this window appears, close the browser.

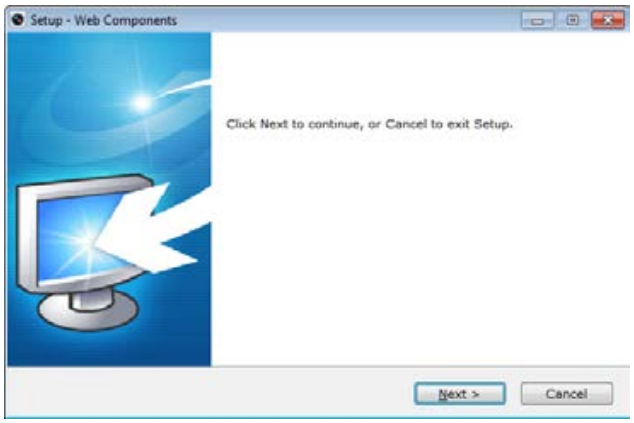

f. Click **Next** to install WebComponents. Allow the plug-in installation to complete. When the following window appears, click **Finish**.

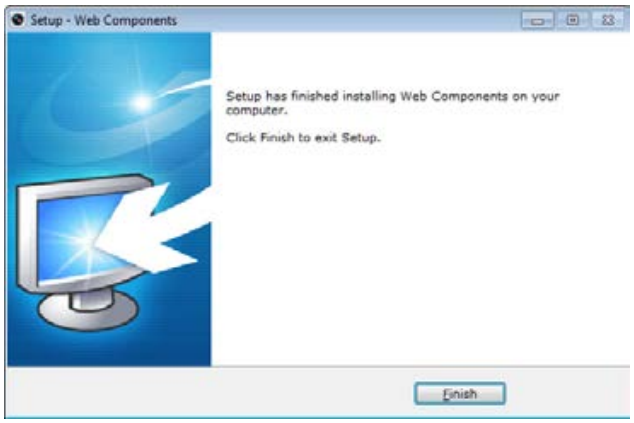

g. Log into the camera again. A **Live View** display will appear.

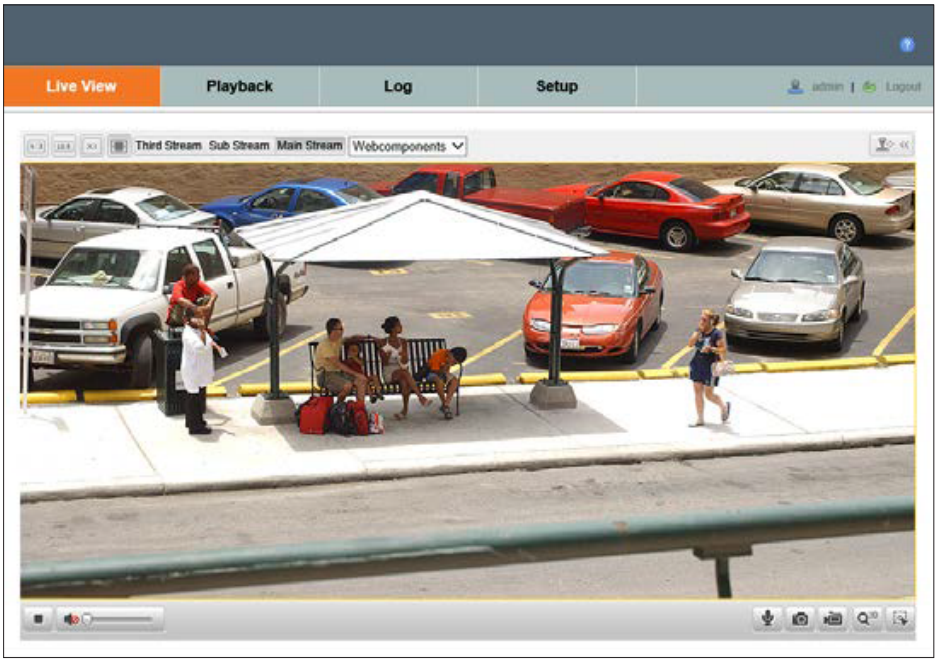

4. In the Live View window shown below, click the PTZ button to open/close the PTZ control panel.

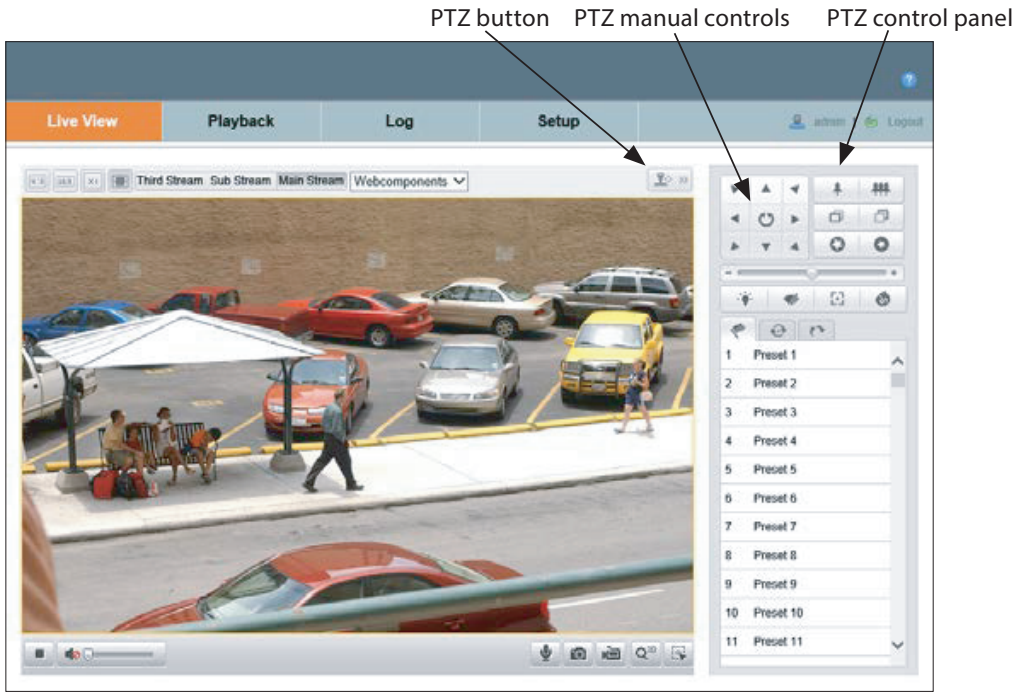

5. In the PTZ control panel, click the manual control arrows to exercise the pan-tilt-zoom features of the camera.

4.1 Additional configuration steps

Refer to the document IP Camera Software User Manual provided on the software and documentation with your camera to customize the configuration of your camera.

APPENDIX A
Specifications

Camera Module	
Image Sensor	1/2.8" Progressive Scan CMOS
Min. Illumination	F1.5, AGC On: Color: 0.02 lux, B/W : 0.002 lux, 0 lux with IR
Max. Image Resolution	1920 x 1080
Focal Length	4.7 ~ 94.0 mm, 20×
Digital Zoom	16×
Zoom Speed	Approx. 3 s (optical Wide ~ Tele)
Angle of View	58.3 ~ 3.2 degree (Wide ~ Tele)
Min. Working Distance	10 ~ 1,000 mm (Wide~Tele)
Aperture Range	F1.6 ~ F3.5
Focus Mode	Auto / Semiautomatic / Manual
DWDR	Support
S/N Ratio	≥ 52 dB
Shutter Time	1 ~ 1/10,000 s
AGC	Auto / Manual
White Balance	Auto / Manual / ATW / Indoor / Outdoor / Daylight lamp / Sodium lamp
Day & Night	IR Cut Filter
Privacy Mask	8 privacy masks programmable
Enhancement	3D DNR, Defog, HLC/BLC
Pan and Tilt	
Range	Pan: 360° endless; Tilt: -15° ~ 90° (Auto Flip)
Speed	Pan Manual Speed: 0.1° ~ 400°/s, Pan Preset Speed: 400°/s, Tilt Manual Speed: 0.1° ~ 200°/s, Tilt Preset Speed: 200°/s
Number of Preset	300
Patrol	8 patrols, up to 32 presets per patrol
Park Action	Preset / Patrol / Pattern / Pan scan / Tilt scan / Random scan / Frame scan / Panorama scan
Scheduled Task	Auto scan / Frame scan / Random scan / Patrol / Pattern / Preset / Panorama scan / Tilt scan / Dome reboot / Dome adjust / Aux output
Features	
Detection	Intrusion detection, Line crossing detection, Audio exception detection, Motion detection
ROI encoding	Support 4 areas with adjustable levels
Infrared	
IR Distance	Up to 492 ft (150 m)
IR Intensity	Automatically adjusted, depending on the zoom ratio

Alarm	
Alarm I/O	2/1
Alarm Trigger	Intrusion detection, Line crossing detection, Audio exception detection, Motion detection, Dynamic analysis, Tampering alarm, Network disconnect, IP address conflict, Storage exception
Alarm Action	Preset, Patrol, Pattern, Recording, Relay output, Upload center, Upload FTP, Email linkage
Input/Output	
Audio Input	1 Mic in / Line in interface, line input: 2 ~ 2.4 Vp-p; output impedance: 1 KΩ ± 10%
Audio Output	1 Audio output interface, line level, impedance: 600 Ω
Network	
Ethernet	10BASE-T / 100BASE-TX, RJ-45 connector
Main Stream (NTSC)	30 fps (1920 ×1080), 30 fps (1280 ×1720)
Sub Stream (NTSC)	60 Hz: 30 fps (704 ×1480), 30 fps (352 ×1240), 30 fps (320 ×1240)
Image Compression	H.264 / MJPEG
Audio Compression	G.711ulaw / G.711alaw / G.726 / MP2L2 / G.722
Protocols	IPv4 / IPv6, HTTP, HTTPS, 802.1X, QoS, FTP, SMTP, UPnP, SNMP, DNS, DDNS, NTP, RTSP, RTP, TCP, UDP, IGMP, ICMP, DHCP, PPPoE
Simultaneous Live View	Up to 20 users
Mini SD Memory Card	Support up to 128 GB micro-SD / SDHC / SDXC card. Supports edge recording
User/Host Level	Up to 32 users, 3 Levels: Administrator, Operator and User
Security Measures	User authentication (ID and password); Host authentication (MAC address); IP address filtering
System Integration	
Application programming	Open-ended API, support ONVIF, PSIA and CG
Web Browser	Internet Explorer® 7.0 or above, Apple® Safari® 5.02 or above, Mozilla® Firefox® 5 or above, Google Chrome™ 18 or above
Power	High-PoE & 24 Vac, Max. 30 W
Working Temperature	-22°F ~ 149°F (-30°C ~ 65°C)
Humidity	90% or less
Protection Levels	IP66, TVS 4,000V lightning protection, surge protection and voltage transient protection
Certifications	FCC, CE, UL, RoHS, IEC / EN 61000, IEC / EN 55022, IEC / EN 55024, IEC / EN60950-1
Dimensions	Φ10.50 in × 14.38 in (Φ266.6 mm × 365.2 mm)
Weight (approx.)	8.81 lb (4 kg)
Mount options	PTZCL: Ceiling Mount Bracket PTZWB: Wall Mount Bracket PTZPM: Pole Mount PTZ Bracket PTZCM: Corner Mount PTZ Bracket
Supplied accessories	
	Installation Guide, HPoE Midspan injector, installation hardware

APPENDIX B
Definitions

3D Digital Noise Reduction	Comparing with the general 2D digital noise reduction, the 3D digital noise reduction function processes the noise between two frames besides processing the noise in one frame resulting in clearer video.
3D Positioning	In the client software, use the click left mouse button on the desired position in the video image, and then drag a rectangle area in the lower right direction. The dome system will move the position to the center and allow the rectangle area to zoom in. Use the left key of the mouse to drag a rectangle area in the upper left direction to move the position to the center and allow the rectangle area to zoom out.
Auto Flips	In manual tracking mode, when a target object goes directly beneath the dome, the video will automatically flips 180 degrees in horizontal direction to maintain continuity of tracking. This function can also be realized by auto mirror image depending on different camera models.
Auto Focus	The auto focus enables the camera to focus automatically to maintain clear video images.
Backlight Compensation (BLC):	If you focus on an object against strong backlight, the object will be too dark to be seen clearly. The BLC function can compensate light to the object in the front to make it clear. This can cause an over-exposure of the background where the light is strong.
Day/Night Auto Switch	The speed domes deliver color images during the day. And as light diminishes at night, the speed domes switch to night mode and deliver black and white images with high quality.
Label Display	The on-screen label of the preset title, time and dome name can be displayed on the monitor. The displays of time and speed dome name can be programmed.
Limit Stops:	The dome can be programmed to move only within the limit stops (left/right, up/down).
Park Action	This feature allows the dome to start a predefined action automatically after a period of inactivity.
Patrol	A patrol is a memorized series of pre-defined preset function. The scanning speed between two presets and the dwell time at the preset are programmable.
Pattern	A pattern is a memorized series of pan, tilt, zoom, and preset functions. By default the focus and iris are in auto status during the pattern is being memorized.
Power Off Memory	The dome supports the power off memory capability with the predefined resume time. It allows the dome to resume its previous position after power is restored.
Preset Freezing:	This feature freezes the scene on the monitor when the dome is moving to a preset. This allows for smooth transition from one preset scene to another. This also guarantees that a masked area will not be revealed when the dome is moving to a preset.
Presets	A preset is a predefined image position. When the preset is called, the dome will automatically move to the defined position. The presets can be added, modified, deleted and called.
Privacy Mask	This function allows you to block or mask certain area of a scene, for preventing the personal privacy from recording or live viewing. A masked area will move with pan and tilt functions and automatically adjust in size as the lens zooms telephoto and wide.
Proportional Pan/Tilt	Proportional pan/tilt automatically reduces or increases the pan and tilt speeds according to the amount of zoom. At telephoto zoom settings, the pan and tilt speeds will be slower than at wide zoom settings. This keeps the image from moving too fast on the live view image when there is a large amount of zoom.
Scan Modes:	The dome provides five scan modes: auto scan, tilt scan, frame scan, random scan and panorama scan.
Scheduled Task	A time task is a preconfigured action that can be performed automatically at a specific date and time. The programmable actions include: auto scan, random scan, patrol 1-8, pattern 1-4, preset 1-8, frame scan, panorama scan, tilt scan, day, night, reboot, PT adjust, Aux Output, etc.

Slow Shutter	With this feature, the camera will automatically extend the exposure time in low illumination conditions to maintain clear video images. The feature can be enabled or disabled.
User Management	The camera allows you to edit users with different levels of permission. Multiple users are allowed to simultaneously access and control the same camera through the network.
White Balance (WB)	White balance can remove the unrealistic color casts. White balance is the white rendition function of the camera to adjust the color temperature according to the environment automatically.
Wide Dynamic Range (WDR)	The WDR function helps the camera provide clear images even with back lit environments. When there are both very bright and very dark areas in the field of view, WDR balances the brightness level of the whole image and provide clearer images and details.

APPENDIX C
Lightning and Surge Protection

This product includes TVS plate lightning protection technology to prevent damage caused by a pulse signal that is below 3000 watts from sources such as lighting, surging, etc. Protection measures must be taken to ensure electrical safety.

- The distance between signal transmission line and high-voltage equipment or high-voltage cable is at least 50 m.
- Outdoor wiring should better be along the eaves as much as possible.
- In the open field, wiring should be buried underground in sealed steel pipe with one-point grounding. Overhead routing method is not acceptable.
- In regions with thunderstorms or where high induction voltage are present (such as high-voltage transformer substation), high power lightning protection apparatus and lightning conductor are necessary.
- The design for installation and wiring with lightning protection and grounding should be combined with the lightning protection consideration of the building, and conform to the relevant national and industry standards.
- The system should ensure equi-potential grounding. Grounding equipment must satisfy both system anti-jamming and electric safety. It must not allow short circuit and open circuit with the zero conductor of strong grid. When the system is singularly ground, the resistance must less than 4 Ω and the cross-sectional area of the grounding cable must be no less than 25 mm^2. For grounding instructions, refer to local electrical codes and this manual.

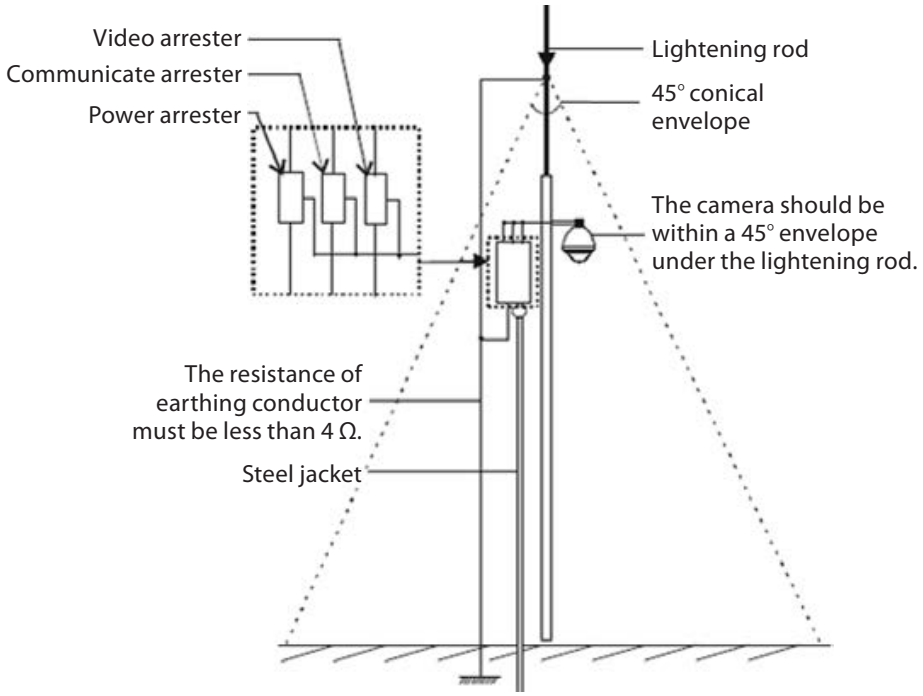

Lightning & Surge Protection

APPENDIX D
24 Vac Wire Gauge and Transmission Distance

The following table shows the recommended maximum distance adopted for the different wire sizes when the 24 Vac voltage loss is less than 10%. For the AC driven device, the maximum voltage loss rate allowable is 10%. For example, for a device with the rating power of 80 VA which is installed 35 feet (10 m) from the transformer, the minimum wire gauge required is 0.8000 mm.

Table 1. Table of wire gauge standards

Distance: ft (m)	Wire Gauge (mm)			
Power (VA)	**0.8000**	**1.000**	**1.250**	**2.000**
10	283 (86)	451 (137)	716 (218)	1811 (551)
20	141 (42)	225 (68)	358 (109)	905 (275)
30	94 (28)	150 (45)	238 (72)	603 (183)
40	70 (21)	112 (34)	179 (54)	452 (137)
50	56 (17)	90 (27)	143 (43)	362 (110)
60	47 (14)	75 (22)	119 (36)	301 (91)
70	40 (12)	64 (19)	102 (31)	258 (78)
80	35 (10)	56 (17)	89 (27)	226 (68)
90	31 (9)	50 (15)	79 (24)	201 (61)
100	28 (8)	45 (13)	71 (21)	181 (55)
110	25 (7)	41 (12)	65 (19)	164 (49)
120	23 (7)	37 (11)	59 (17)	150 (45)
130	21 (6)	34 (10)	55 (16)	139 (42)
140	20 (6)	32 (9)	51 (15)	129 (39)
150	18 (5)	30 (9)	47 (14)	120 (36)
160	17 (5)	28 (8)	44 (13)	113 (34)
170	16 (4)	26 (7)	42 (12)	106 (32)
180	15 (4)	25 (7)	39 (11)	100 (30)
190	14 (4)	23 (7)	37 (11)	95 (28)
200	14 (4)	22 (6)	35 (10)	90 (27)

Table 2. Wire Gauge Standards

Bare Wire Gauge (mm)	American Wire Gauge AWG	Cross-sectional Area of Bare Wire (mm^2)
0.750	21	0.4417
0.800	20	0.5027
0.900	19	0.6362
1.000	18	0.7854
1.250	16	1.2266
1.500	15	1.7663
2.000	12	3.1420
2.500		4.9080
3.000		7.0683

NVR-POE Series Embedded Network Video Recorders Quick Setup Guide

This quick setup guide provides instructions to initially setup and use the NVR-POE network video recorders (NVRs).

Controls and Indicators

Front panel

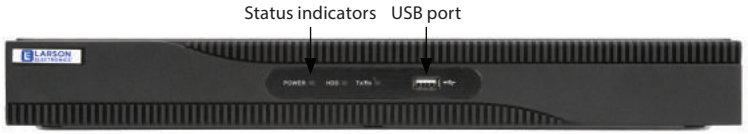

Item		Function / Description
Status Indicators	POWER	Indicator is green when the unit is powered on. When the unit is off, the LED is red if power is available.
	HDD	HDD indicator blinks red when data is being read from or written to an HDD.
	TX/RX	Blinks green when the network connection is functioning normally.
USB Interfaces		Universal Serial Bus (USB) 2.0 port for additional USB devices such as a mouse or Hard Disk Drive (HDD).

NVR-POE-4CH Backpanel

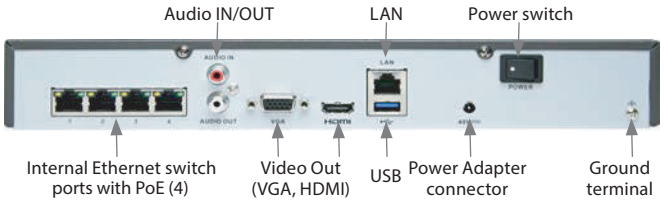

NVR-POE-8CH Backpanel

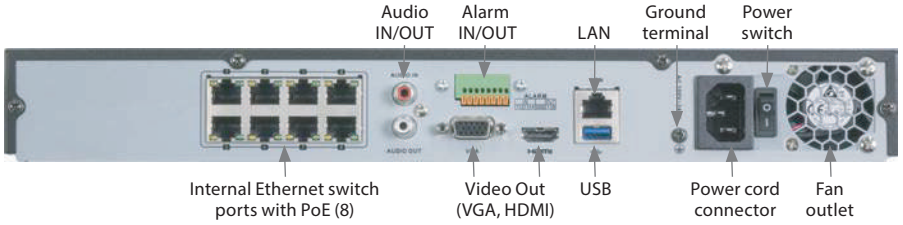

Item	Description
VIDEO OUT (VGA, HDMI)	1 channel (HDMI/VGA). See "Specifications" on page 4 for supported output resolutions.
Audio IN / OUT	RCA connectors for audio line input and line output
Alarm IN / OUT	Terminations are provided for 4 alarm inputs (N.O. or N.C.) and 1 alarm output. See below. (If applicable)
Power connector	NVR-POE-4CH: Connect the 48 Vdc power adapter provided with the recorder to this port, and to a standard 100 ~ 240 Vac power source using the power cord provided. NVR-POE-8CH: Connect the power cord provided with the recorder to this port and to a standard 100 ~ 240 Vac power source.
ON / OFF Switch	Switch for powering the recorder on or off.
GROUND	Terminal for ground. Connect to earth ground before powering on the NVR.
LAN	10/100BASE-T (NVR-POE-4CH) or 10/100/1000BASE-T (NVR-POE-8CH) Ethernet network interface
USB interface	Universal Serial Bus (USB) port for additional devices such as USB mouse and USB Hard Disk Drive (HDD). USB 3.0 port in NVR-POE-8CH only.
Internal Ethernet switch ports	4 (NVR-POE-4CH) or 8 (NVR-POE-8CH) 10/100 Mbps ports for IP cameras. These ports provide Power over Ethernet (PoE).

Alarm IN / OUT Terminals (If applicable)

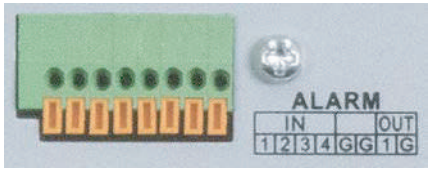

Item	Description
ALARM IN (1 through 4 and G, G (ground))	Alarm inputs 1 - 4. Alarm input is tied to ground at G or G terminals through the alarm sensor (N.O. or N.C.).
ALARM OUT (1 and G)	Alarm outputs 1 with ground termination.

Mouse control

A standard 3-button (left / right / scroll-wheel) USB mouse can also be used with this NVR. To use a USB mouse:

1. Plug the USB mouse into the either the front panel or back panel USB connector of the NVR.

2. The mouse will be automatically detected. If the mouse is not detected, the mouse may not be compatible with the NVR. Please refer to the recommended device list from your provider.

Using the mouse

Action	Effect
Left click	**Single click**: Live view: Select channel and show the quick set menu. **Menu**: Select and enter.
	Double click: Live view: Switch between single-screen and multi-screen.
	Click and drag: PTZ control: pan, tilt and zoom. **Tamper-proof, privacy mask and motion detection**: Select target area. **Digital zoom-in**: Drag and select target area. **Live view**: Drag channel / time bar
Right click	**Live view**: Show menu. **Menu**: Exit current menu to upper level menu.
Scroll wheel	**Scroll up**: Live view: Previous screen. **Menu**: Previous item.
	Scroll down: Live view: Next screen. **Menu**: Next item.

Step 1. Getting Started: Unpacking the Equipment

What's in the box

Your system includes:

- NVR
- 48 Vdc power adapter (NVR-POE-4CH only)
- 6 foot Ethernet cable
- 6 foot HDMI cable
- Power cable, power adapter and cable
- HDD SATA and power interface cables for internal hard disk drive(s)

Remove the equipment from its packaging and place it on a flat, clean surface. Inspect each item. If any visible damage is present, contact your supplier for a replacement. Verify that your order is complete.

What you need

Although each security system installation is different, most require the following items not included with your system components:

- VGA or HDMI compatible computer monitor
- IP cameras and cables compatible with the NVR
- Tools to install the cameras and route power and Ethernet cables
- Fasteners to attach the cameras to the mounting surfaces
- A display device to connect to the NVR. The NVR will connect directly to a VGA video monitor or an HDMI monitor (HDMI cable is provided). The display device is usually needed only for system setup. It can be disconnected when the NVR is networked for access across a LAN or Internet.
- Uninterruptible power supply (UPS). This device is used to ensure system stability during voltage surges, sags, and outages. If a UPS is not available, a power strip with strong surge protection is highly recommended.

Step 2. HDD Installation

HDD comes preinstalled. Please contact Larson Electronics for replacement information.

Step 3. Install the NVR

For the following steps, refer to the back panel photo above for the location of connectors.

1. Place the NVR in a location that is secure, well ventilated and clean. The NVR should be positioned such that the back panel connectors are accessible and the ventilation holes on the sides are not blocked.

2. Connect the ground terminal on the back of the NVR to an earth ground. Refer to local codes for proper grounding.

Step 4. Connect alarm devices to the NVR

Wiring alarm inputs to the NVR

You can wire up to 4 alarm inputs to the NVR.

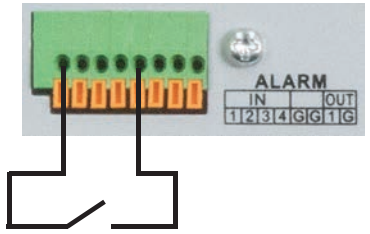

Typical ALARM IN wiring

Wiring alarm outputs to the NVR

The NVR provides 1 alarm output termination that supports a DC load alarm out circuit. These terminations are marked on the back of the NVR and are labeled OUT 1 G (G = ground termination).

DC load alarm output circuits

DC loads must operate within the limitation of 12V / 1A. To connect to a DC alarm output, use the following diagram:

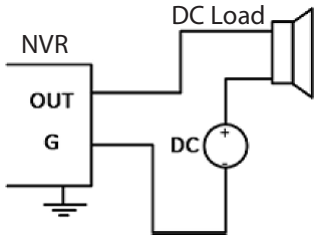

Step 5. Install a monitor, mouse, power

For the following steps, refer to the back panel photo above for the location of connectors.

1. Install and setup your monitor in accordance with the instructions provided with the monitor. Do not power it on at this time.
2. Cable the HDMI or VGA connector to your monitor's VGA or HDMI input. The HDMI interface provides the best performance.
3. Plug the mouse into the USB connector on the front or back of the NVR.
4. If you plan to access your NVR remotely, or configure your NVR to transmit alerts, email, etc. to external servers, plug a drop cable from your local area network (LAN) into the RJ45 LAN connector on the back of the NVR.
5. Connect the power cord (or power adapter for NVR-POE only) to the power connector on the back panel of the NVR, and then into a UPS (recommended) or surge protector.

Step 6. Install cameras

Install your security cameras. Always follow the installation instructions provided with the camera. **NOTE**: If the cameras feature Power over Ethernet PoE), the cameras that plug into the ports on the back of the NVR can be powered through those ports.

Step 7. Connecting it together – initial system setup

1. Plug the Ethernet drop cables from the cameras into the RJ-45 Ethernet Switch Ports on back of the NVR.
2. Power on your cameras.
3. Power on the NVR using the power on / off (I / O) switch on the back panel.
4. Power on the monitor.

NOTE *Some monitors have multiple inputs such including VGA ,HDMI, BNC, etc. If you are using this kind of monitor, configure your monitor to* display the input connected to your NVR (HDMI or VGA).

Step 8. Use the Wizard for basic configuration setup

Power on the NVR. Normally, an splash screen appears within 2 minutes.

Password _____

(Write New Password Here)



By default, the Setup Wizard will open automatically.

Important Notes for using the Wizard: **Default Password:** **ChangeMeN0w**

- **Password**: When logging into the recorder for the first time, create a "**Strong**" administrator user password. Follow the on-screen instructions, and save this password and the GUID file created by the firmware in a secure location. **NOTE**: There is no factory default password for this device.
- **Date and Time**: Set the time zone, date and time correctly. All recorded video and capture (photo) files are time stamped.
- **Storage - HDD**: In the HDD Management wizard, if a new recorder is shipped with a pre-configured HDD, nothing needs to be done with it in this window. If you installed an HDD or replaced the HDD, that HDD needs to be initialized by the recorder before it can be used to record data. Select (check the box for) that HDD, then click **Init** to initialize the disk. **NOTE**: **Init** will erase all data from the disk and can take several minutes to complete. When the initialization is complete, click **Next** to continue.
- **Network Settings**: By default, the recorder acquires it's network settings using DHCP (dynamic network settings). Depending on the configuration of the network, these settings may change. To improve remote access to the recorder, Observint recommends that you configure the DVR with fixed network settings. To easily change the DHCP acquired network settings to fixed network settings, un-check the **Enable DHCP**option in the network setup menu, and then click **Apply**.

Step 9. Access the Menu system

After the initial setup of your QVR using the Wizard, the Menus interface enables you to refine your configuration settings and expand the functionality of the system. To use most menus, the user must log into the NVR system, either locally or remotely, with administrative privileges. To open the Menu system from the Live View screen, right click anywhere in the screen, then select **Menu**.

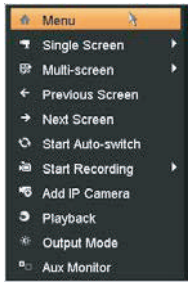

If ID Authentication is not disabled (see the **Menu | Configuration | General** settings), a login window will open. In the Login window, select a User Name with administrative privileges, enter its password, then click **OK**. A window of Menu icons will open.

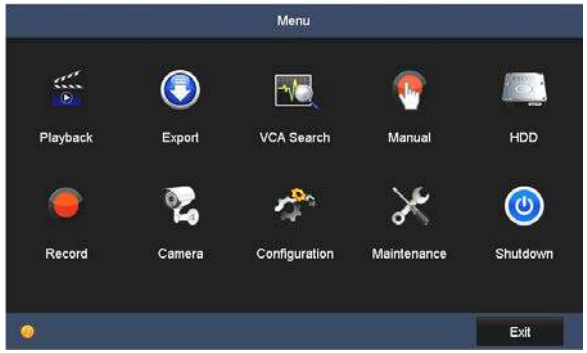

For additional information about using your system, refer to the ***Embedded Network Video Recorder Firmware V3.4.x User Manual*** provided electronically with your system.

Specifications

Model	NVR-POE-4CH	NVR-POE-8CH	
Number of Channels Supported	4	8	
Compression Format	Supports H.265/H.264/H.264 OVC		
Recording Performance	40 Mbps max	80 Mbps max	
Remote Viewing Output Capacity	80 Mbps max	160 Mbps max	
Supported Frame Rate per Channel	Main stream: Up to 60 fps Sub-stream: Up to 60 fps		
Recording Type	Continuous, Schedule, Event, Motion Detection, VCA		
Supported IP Camera Resolution	8MP / 6MP / 5MP / 4MP / 3MP / 1080p / UXGA / 720p / VGA / 4CIF / DCIF / 2CIF / CIF / QCIF		
Supported Playback Resolution	8MP / 6MP / 5MP / 4MP / 3MP / 1080p / UXGA / 720p / VGA / 4CIF / DCIF / 2CIF / CIF / QCIF		
Synchronous Playback	4-ch @ 1080p	2-ch @ 4K, or 8-ch @ 1080p	
Video Output	VGA, HDMI		
HDMI Video Output Formats	4K (3840 × 2160)/30 Hz, 1920 × 1080/60 Hz, 1600 × 1200/60 Hz, 1280 ×1024/60 Hz, 1280 × 720/60 Hz, 1024 × 768/60 Hz		
VGA Video Output Formats	1920 × 1080/60 Hz, 1600 × 1200/60 Hz, 1280 × 1024/60 Hz, 1280 × 720/60 Hz, 1024 × 768/60 Hz		
Two Way Audio Input	1-ch, RCA (Linear, 1kΩ)		
Audio Output	1-ch, RCA (Linear, 1kΩ)		
Export Formats	MPEG4		

Model	NVR-POE-4CH	NVR-POE-8CH	
Ethernet	1x 10/100 Mbps RJ-45 self-adaptive Ethernet interface, 4 independent 10 /100 Mbps PoE Ethernet interfaces	1x Gigabit RJ-45 self-adaptive Ethernet interface, 8 independent 10 /100 Mbps PoE Ethernet interfaces	
Power Over Ethernet	Max Power: 40 W Supported Standards: 802.3af, 802.3at	Max Power: 120 W Supported Standards: 802.3af, 802.3at	
USB	2x USB 2.0	1x USB 2.0 (front panel), 1x USB 3.0 (rear panel)	
Hard Drive Interface	1x SATA	2x SATA	
Hard Drive Capacity	1x HDDs max, up to 6TB capacity	2x HDDs max, up to 6TB capacity each	
Alarm Input	Camera Dependent	x4 (NVR) and Camera Dependent	
Alarm Output	Camera Dependent	x1 (NVR) and Camera Dependent	
Operating System	Embedded Linux		
Security	Password Protection		
Protocols	TCP/IP, DHCP, DNS, DDNS, NTP, SADP, SMTP, NFS, iSCSI, UPnP™, HTTPS		
Power Requirements	48 Vdc	100~240 Vac ≤ 180 W	
Power Consumption	≤ 10 W (without HDD)	≤ 15 W (without HDD)	
Weight	2.2 lbs. (without HDD)	6.6 lbs. (without HDD)	
Dimensions (in.)	12.4" W × 9.1" D × 1.8" H	15.0" W × 11.4" D × 1.8" H	
Operating Temperature	14°F ~ 131°F		
Color / Material	Black		
Material	Aluminum		
Approvals	CE, FCC, RoHS, UL		
Remote Client System Requirements			
Operating System	Microsoft Windows XP, Vista, 7, 8, 10 (32-bit and 64-bit version) Apple MacOS X 10.5 (Intel x86 only), 10.6 and 10.7		
Web Browser	Microsoft Internet Explorer 8.0, 9.0, 10, and 11 (32-bit version), Safari 5 and higher		
Software Requirements	Web Component Installation		

Password Reset

1. If they are not already connected, connect a monitor and a USB mouse to the NVR. Use the USB port at the back on the unit to connect the mouse. The device will not accept a keyboard; you will use an on-screen keyboard to enter information.

2. Power up the NVR if it is not already running.

3. Right-click anywhere on the screen to bring up an initial menu. Select Menu from this list. You will then get a dialog box asking for a username and password.

4. Double-click in the lower left corner of this dialog box (not the lower left corner of the screen). There is an invisible button in this dialog box. Another dialog box will appear, asking for the unit's serial number and a secure code. A unique serial number will populate on its own. Product ID located on bottom of unit.

5. Call Larson Electronics tech support at 877-348-9680 When a support tech answers, tell them that you have lost the administrative password to your NVR and wish to reset it to factory default. They will ask for the unit's serial number, which you got in step 4. Please provide a return contact number with the serial number. The tech will have to validate the serial number and call back with a confirmation number. They will provide you with the secure code. Write this code down before entering it into the dialog box on screen to make sure that you got it correctly from the tech. Click OK when done.

6. After entering the secure code and clicking OK, you will then be able to set the admin password to one of your choosing.

Note: As a security feature, be aware that the secure code that the tech provides will only be good for 24 hours.