EPL-EMG-CM-LED10W-RET-3FT-PB
INSTALLATION, OPERATION & MAINTENACE DATA SHEET
(EPL-EMG-CM SERIES LED EMERGENCY FACTORY SEALED LIGHTING FIXTURES)

IMPORTANT SAFEGUARDS – READ AND FOLLOW ALL SAFETY INSTRUCTIONS.

NOTE: LAMP MUST BE INSTALLED BEFORE OPERATING

Remove globe assembly, unpack bulb and insert into socket.

See installation instruction sections 4 & 5 for removal of globe assembly.

NOTE: Read this sheet carefully before beginning installation.

- Do not use this equipment for other than the intended use as specified on equipment nameplate.
- **WARNING:** Turn off the supplying circuit before beginning installation, or performing any maintenance including re-lamping.
- Do not install near gas or electric heaters.
- Do not attempt to service battery. The emergency ballast contains a sealed, no-maintenance battery. Contact manufacturer for information on replacements.
- Batteries must be recycled or disposed of properly.
- Servicing should be performed by qualified service personnel.
- The use of accessory equipment not recommended by the manufacturer can cause an unsafe condition
- Equipment should be mounted in locations and at heights were it will not readily be subjected to tampering by unauthorized personnel.
- The emergency ballast is for use with E26 LED lamps only.

INSTALLATION:

Important Note:

1. All installations must comply with the applicable local and/or National Electrical Code.
2. Before installing, check the fixture nameplate to be sure you have the correct fixture.
3. Verify ground continuity in the electrical system.
4. The emergency ballast must be connected to an unswitched power source.
5. Refer to nameplate for specific ambient and supply wire temperature rating.

LARSON ELECTRONICS LLC • 9419 E US HWY 175 • KEMP, TX 75143
p: 1-800-369-6671 • intl: 903-498-3363 • f: 903-498-3364 • sales@larsonelectronics.com

Following steps required for installation -

1. Install unit's mounting accessory per instructions supplied with the mount.
2. Install unit's pushbutton test station (purchased separately) per instructions supplied with the station. Station must be wired to fixture mount to provide a method of disconnection the supply source from the unit. An example of how this can be completed is shown in Fig.1 for typical installation.
3. Verify that the supply voltage available is 120V thru 277V.
4. The fixture comes wired for 120V thru 277V operation from the factory. Lamp provided with fixture is to be installed in a non-hazardous environment as follows: (A) Unscrew and remove the globe support assembly (B) from the unit tank (C). Install lamp. Re-attach globe assembly (B) to unit tank (C). Attach fixture to the installed mount. If 277V application is desired refer to step 5.

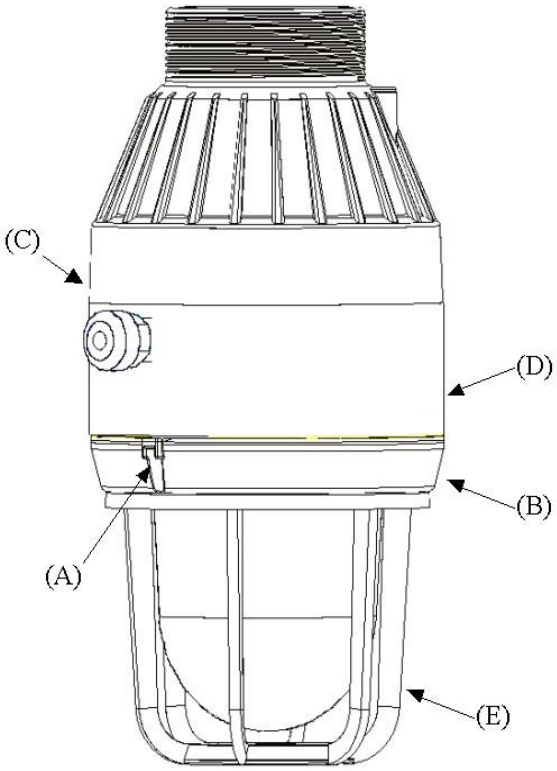

CAUTION: During installation or maintenance, care must be taken to avoid scratching, nicking or chipping the glass globe.

5. Make sure the external threads at the top of the unit tank are free of any dirt, metal chips or other foreign materials. Apply a thin coat of Killark "LUB T" lubricant to the threads.

NOTE: Take extreme care not to cross thread the unit when installing into the mounting accessory. Install the unit by threading into the mounting accessory; the electrical contacts will automatically engage. Be sure the unit is threaded tight. Tighten the set screw on the side of the mounting accessory.

6. Energize unit and verify that proper charging of the fixture is occurring by

LARSON ELECTRONICS LLC • 9419 E US HWY 175 • KEMP, TX 75143
p: 1-800-369-6671 • intl: 903-498-3363 • f: 903-498-3364 • sales@larsonelectronics.com

observing if the red charging indicator lamp inside of globe area is on.

7. Test emergency lamp operation by pressing PUSH-TO-TEST pushbutton of test station and observe that the lamp operates.
8. To install optional guard (E) loosen the four screws on the bottom of the globe support ring, slip the guard over the screws and rotate to the locked position. Tighten the screws firmly.

NOTE: Emergency ballast must be charged for 36 hrs before running test(s).

MAINTENANCE:

As routine maintenance, this emergency fixture should be checked periodically to ensure it is working. The following schedule is recommended.

1. Visually inspect the charging indicator light monthly. It must be illuminated.
2. Test operation of the circuit at 30 day intervals for a minimum of 30 seconds. The lamp should operate.
3. Conduct a 90 minute discharge test once a year. The lamp should operate for 90 minutes.

CAUTION: To reduce the risk of electrical shock, disconnect the AC input and inverter before servicing.

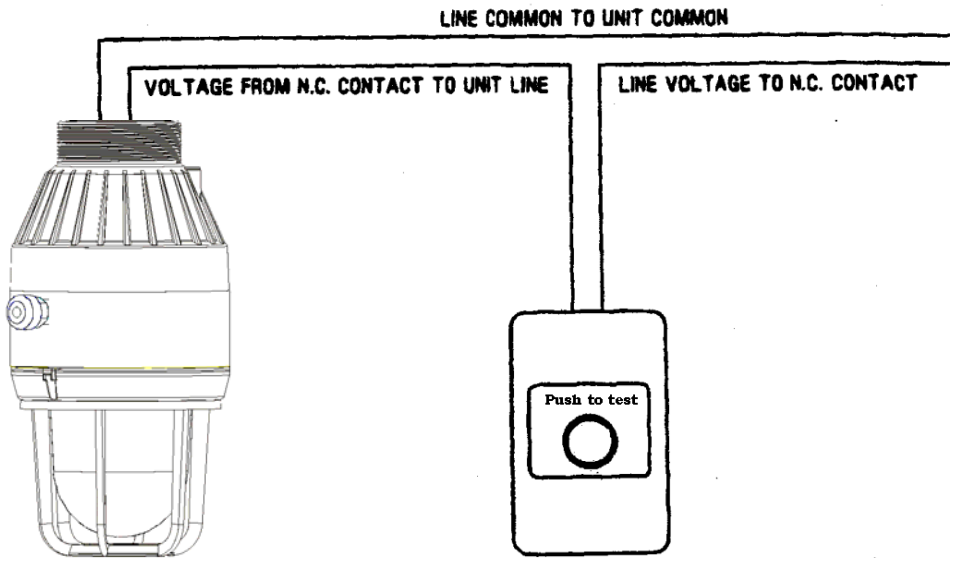

FIG.1

LARSON ELECTRONICS LLC • 9419 E US HWY 175 • KEMP, TX 75143
p: 1-800-369-6671 • intl: 903-498-3363 • f: 903-498-3364 • sales@larsonelectronics.com