LARSON ELECTRONICS®

INSTALLATION OPERATION & MAINTENANCE SHEET

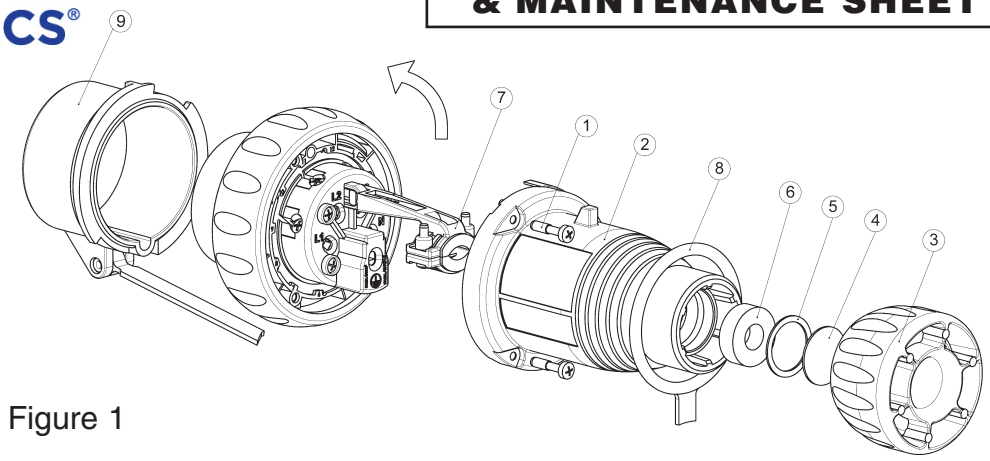

Figure 1

5. Wiring of Plug HLP-EX-20A Series

5.1 Cord Type

Select a flexible cord with copper conductors of the appropriate insulation, ampacity and 75°C or 90°C temperature rating. For installations in the U.S., refer to the NEC, Sections 400.4, 400.5, 501.140, 502.140 and 503.140. For installation in Canada refer to CEC section 4 & 18

NOTE: Cords with O.D. between 0.6" and 1.1" can be used. Maximum wire range for plug terminals is 1 x 14 to 1 x 8 AWG.

5.2 Cord Preparation

Cut the cord cleanly - Do not strip away cord jacket or conductor insulation at this time.

5.3 Opening the Plug

Referring to Figure 1 above, loosen screws ① and remove the plug housing ②. Then unscrew the compression collar ③ and remove the close-up disc ④ and discard it. Then remove the friction washer ⑤ and grommet ⑥.

5.4 Insert the Cord

Guide the compression collar ③ and the friction washer ⑤, over the cord.

5.4.1 Install Cord Grommet

The grommet ⑥ is a universal onion ring style which accommodates several cord diameters by removing (cutting out) the inner undersized diameters. The grommet should fit snugly on the cord. The grommet may require lubrication in order to slide over the cord. Use talcum powder or an equivalent material rated for use on electrical products. Slide the grommet over the cord with the cuts toward the plug housing ②.

NOTE: If the grommet slides freely over the cord, there will be insufficient sealing for Class II and Class III Hazardous Locations.

5.4.2 Slide the strap ring ⑧ and the plug housing ② over the cord.

5.5 Cord Preparation

Dress the cord by removing the outer jacket and fillers for a length of 2 1/2" (63 mm) and strip the insulation off of the conductors 1/2" (12 mm) from the end.

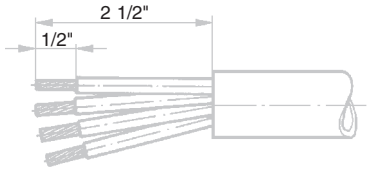

5.6 Connection to Terminals

Flip the strain relief ⑦ out of the way. Attach the leads to the appropriate terminals and torque with 16 in-lbs (1.8 N-m).

CAUTION: The Equipment Grounding Conductor (green wire) is to be connected to the terminal marked ⏚.

5.7 Strain Relief

Open the clamp ⑦ and if necessary adjust the I.D. to the O.D. of the cord by taking out 1 or 2 of the clamp inserts. Then flip the strain relief back and clamp the cord using 14 in-lbs (1.6 N-m) torque.

5.8 Plug Assembly

Rejoin the two parts of the plug enclosure paying careful attention to the orientation of the alignment tap and reinstall the three screws ①. Slide the grommet ⑥ into position in the receiving cavity of the plug housing, then place the friction washer against the grommet and turn on the compression collar until a good compression is achieved.

6. Maintenance

The only maintenance is a periodic inspection for damage and proper operation. The surface of the plug pins and the pin chamber should be kept clean. Any damaged equipment should be replaced promptly to ensure the electrical safety and explosion protection of the system.

Note: The nature of these instructions is only informative and does not cover all of the details, variations or combinations in which this equipment may be used, its storage, delivery, installation, safe operation and maintenance. Since conditions of use of the product are outside of the care, custody and control of the manufacturer, the purchaser should determine the suitability of the product for his intended use, and assumes all risk and liability whatsoever in connection therewith.