NOTE

Interior wiring from rear view of switch

3 Pole 5 Wire Option
3 Hots 1 Nuetral & ground

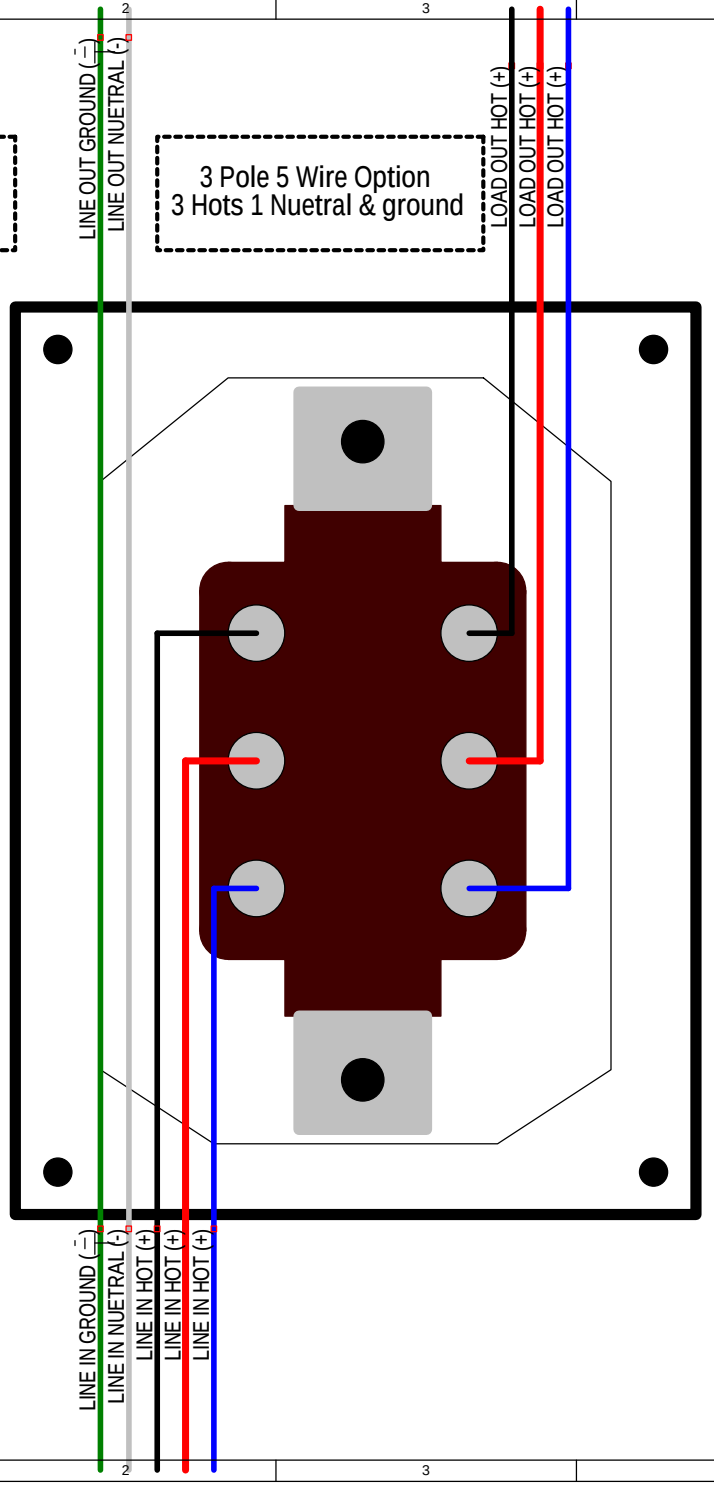

DSD917 1-3 Pole Switch
250V (30A)
600V (20A)

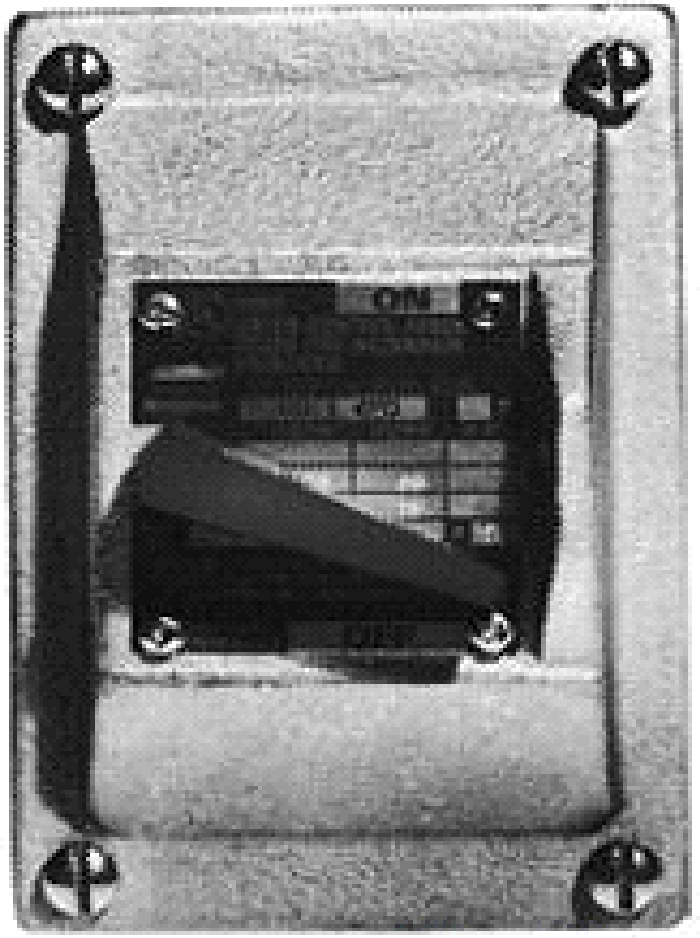

LARSON ELECTRONICS

Title: EPS-30A-DPST		
Author: David Downs		
File: nts\Tiny Cad Files\EPS-30A-DPST (page 1).dsn		Document
Revision: 1.0	Date: 04/12/2016	Sheets: 1 of 2

NOTE

Interior wiring from rear view of switch

2 Pole 4 Wire Option
2 Hots 1 Nuetral & ground

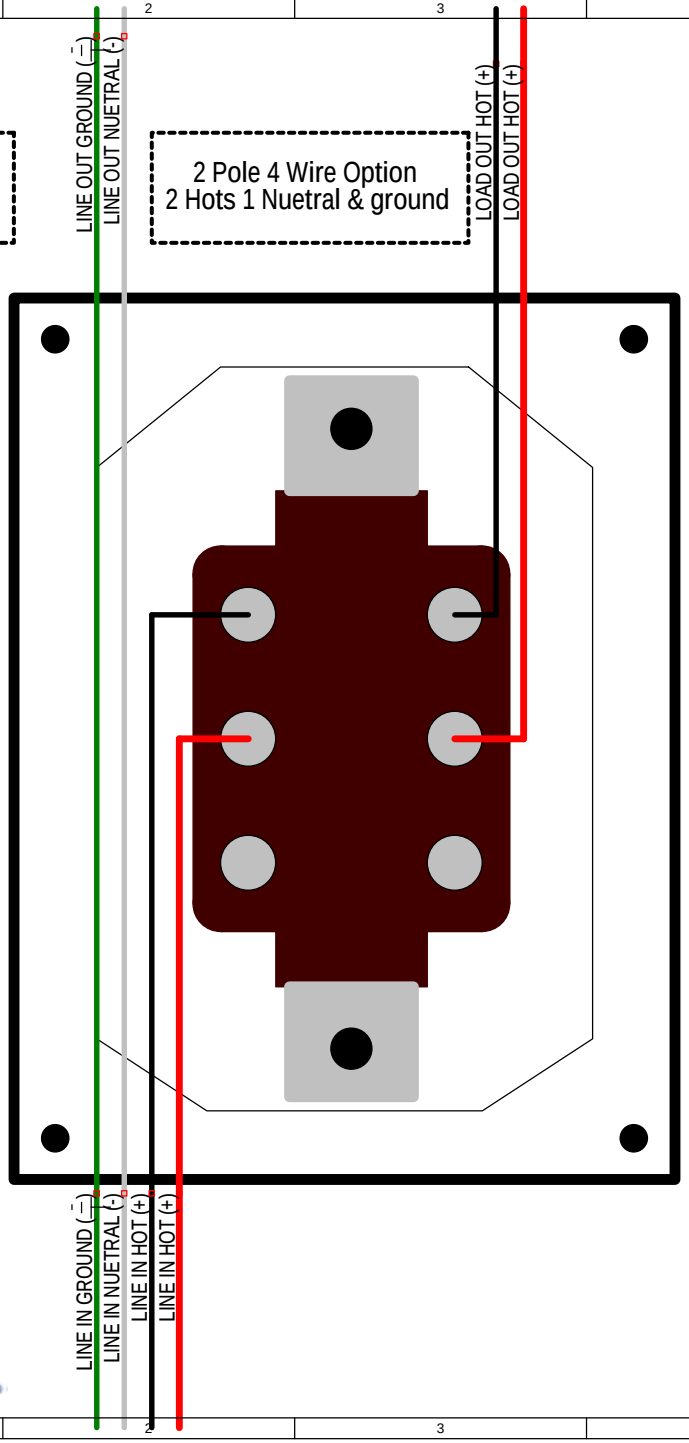

1 Pole 3 Wire Option
2 Hots 1 Nuetral & ground

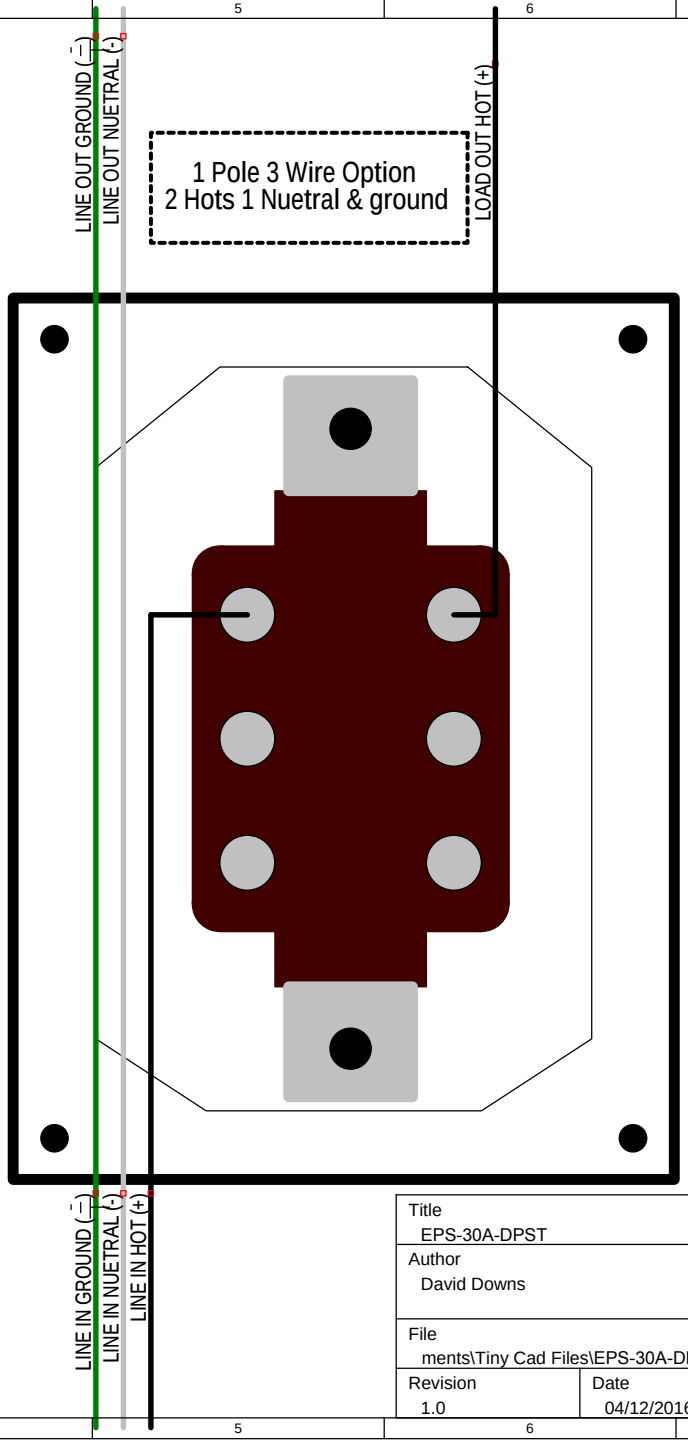

LARSON ELECTRONICS

Title: EPS-30A-DPST		
Author: David Downs		
File: ments\Tiny Cad Files\EPS-30A-DPST (page 2).dsn		Document
Revision: 1.0	Date: 04/12/2016	Sheets: 2 of 2