10W Explosion Proof LED Emergency Exit Sign

Installation instructions

IMPORTANT SAFEGUARDS

When using electrical equipment, basic safety precautions should always be followed including the following:

READ AND FOLLOW ALL SAFETY INSTRUCTIONS

1. Make sure the area is NON-HAZARDOUS before installing or servicing the unit.
2. Turn off electrical power before and during installation and maintenance.
3. Before opening, turn off electrical power and wait until the unit is cool.
4. Do not install where the marked operating temperatures (T-Code) exceed the ignition temperature of the hazardous atmosphere.
5. Do not operate in ambient temperatures above those indicated on the rating labels.
6. Keep tightly closed when in operation.
7. Do not use outdoors.
8. Do not mount near gas or electric heaters.
9. Use caution when handling batteries. Battery acid can cause burns to the skin and eyes. If acid is spilled on the skin or eyes, flush acid with fresh water and contact a physician immediatly. Avoid possible shorting.
10. Equipment should be mounted in locations and at heights where it will not readily be subjected to tampering by unauthorized personnel.
11. The use of accessory equipment not recommended by the manufacturer may cause an unsafe condition.
12. Do not use this equipment for other than intended use.
13. Servicing of this equipment should be performed by qualified service personnel.

SAVE THESE INSTRUCTIONS

Installation Instructions

1. **Turn off unswitched AC power.**
   a. Remove the lens-legend (3). Disconnect the lamps from terminal block (see fig 4) and remove the electronic module (3). Four screws secure the electronic module to the housing.
   b. Determine which holes in the housing will be used for AC wires. Support frame by two blocks of wood, maximum one inch apart. Strike knockouts with a hammer and screwdriver. Clear holes of burrs to allow proper installation of the fitting. Install conduit fitting rated for Class I Div 2, on the housing.

Conduit Entry

a. Install the unit on the wall with 4 screws (not provided). Use the ears located on each side (see figure 2).

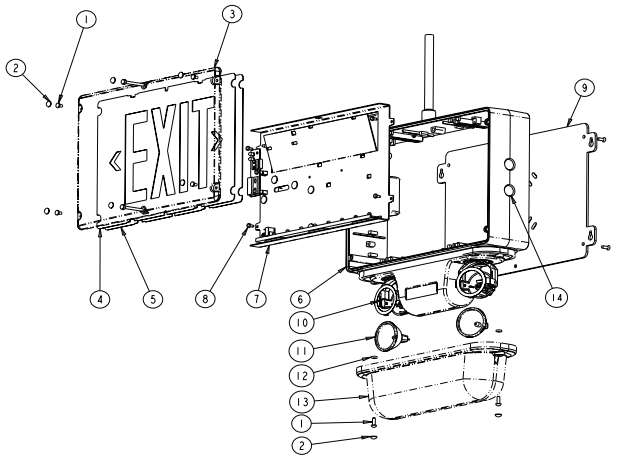

Figure 1

Part List

1. Tamper-proof screw
2. Screw covers
3. Lens-legend
4. EXIT panel
5. Diffuser panel
6. Frame
7. Electronic module
8. Electronic module screws (4)
9. Back plate
10. Swivel
11. MR16 lamp
12. O-ring
13. Lens-emergency light
14. Knock-out covers
15. Junction box

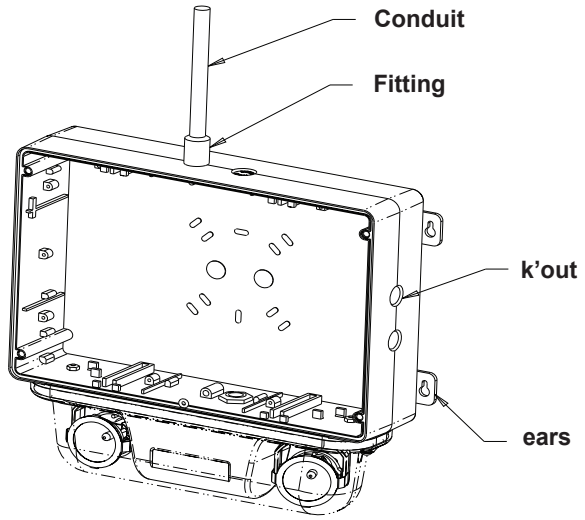

Figure 2

b. Route unswitched AC circuit wires into the housing through conduit.
c. Reinstall the electronic module inside the housing using the four screws.

Junction Box Entry

a. Remove appropriate knock-outs on back plate for installation on junction box (see figure 3).
b. Route unswitchd AC circuit wires into the housing through large hole in back plate.
c. Install the unit on the junction box (Rated for Class1 Div 2) with the junction box screws.
d. Reinstall the electronic module inside the housing using the four screws.

2. ELECTRICAL CONNECTIONS

Auto-diagnostic models (refer to figure 4.):

a. Connect transformer primary wires to AC wires from building: white wire with neutral; black (for 120VAC) or orange (for 277VAC) to line voltage. Unused primary wire must be insulated to prevent shorting. Connect green wire to the ground.
b. Reconnect the lamps on terminal blocks (L1+/L1-).
c. For units with remote capacity, connect the remote heads DC+ to L1+ and DC- to L1-.
d. Connect the battery to the charger board.

3. Lamps adjustment:

a. To access the lamps, remove the lens. Remove the lamps protectors. Adjust the lamps in appropriate position. Put the lens back in place.

4. Put the unit cover back in place. Make sure the unit is tightly closed.

5. Energize AC.

Manual Testing

Operate the magnetic “test switch” by holding the provided magnet where indicated near the LED display (see figure 5). This will initiate a one minute test. The DC lamps will illuminate for approximately one minute, then the unit will automatically return to stand by mode. Test can be cancelled by holding the magnet near the test switch again.

Automatic Testing

The unit will perform an automatic self-test of 1 minute every month, 10 minutes every 6 month and a 30 minutes self-test once a year.

Automatic Diagnostics

There are five diagnostic indicators: one external and four internal. Unit must be opened to gain access to internal indicators.
External: Servicel alarm, “Service Required”. The LED will turn-on if any alarm condition is detected (see fig. 5).
Internal: Battery Failure, Battery Disconnect, Charger Failure & Lamp Failure. Steady ON if alarm condition exists.
Normal operation, No fault — “Service Required” is OFF.
Faulty operation — “Service Required” is ON.
(see AD charger owner manual for more details)

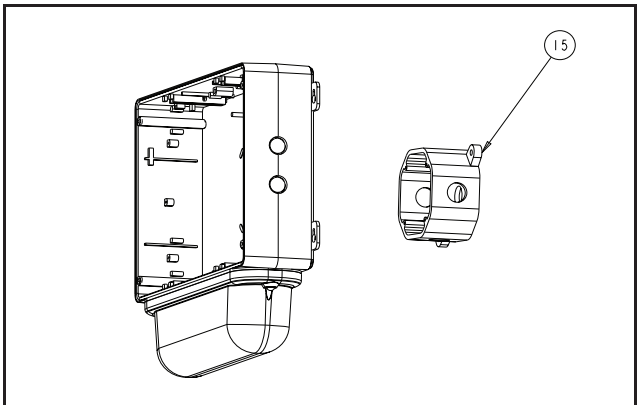

Figure 3

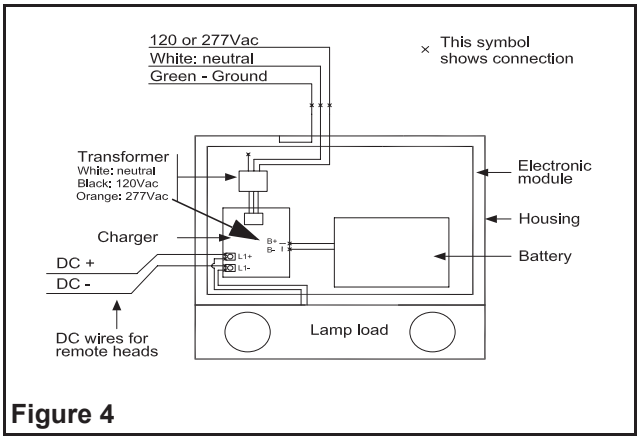

Figure 4

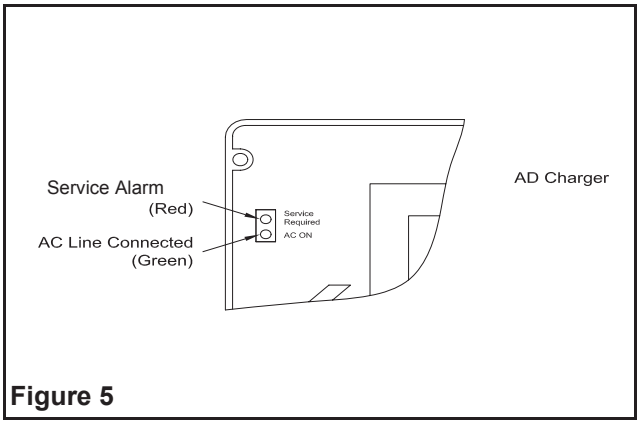

Figure 5