Hazardous Location Mushroom Push Button
C1D2/C2D - ATEX/IECEx - IP66/N4X
Instruction Manual

Thank you for your purchase of the Larson Electronics HLSW-xx-SP0003 Hazardous Location Push Button.

WARNING

TO AVOID THE RISK OF FIRE, EXPLOSION OR ELECTRIC SHOCK, THIS PRODUCT SHOULD BE INSTALLED, INSPECTED AND MAINTAINED BY A QUALIFIED ELECTRICIAN ONLY, IN ACCORDANCE WITH ALL APPLICABLE ELECTRICAL CODES.

TO AVOID ELECTRIC SHOCK:

- BE CERTAIN ELECTRICAL POWER IS OFF BEFORE AND DURING INSTALLATION AND MAINTENANCE.
- PRODUCT MUST BE CONNECTED TO A WIRING SYSTEM WITH AN EQUIPMENT-GROUNDING CONDUCTOR.

TO AVOID EXPLOSION:

- MAKE SURE THE SUPPLY VOLTAGE IS WITHIN THE VOLTAGE RATING.
- ENSURE THE MARKED T RATING IS LESS THAN THE IGNITION TEMPERATURE OF THE HAZARDOUS ATMOSPHERE.
- DO NOT OPERATE IN AMBIENT TEMPERATURES ABOVE THOSE INDICATED ON THE PRODUCT NAMEPLATE.
- DO NOT OPERATE IF THE LENS, CORD, SEALS, HOUSING, RECEPTACLES, ETC. IS CRACKED OR DAMAGED. IF SO, DISCONTINUE USE AND CONTACT MANUFACTURER FOR REPLACEMENT PARTS.
- ALL FASTENERS SHOULD BE PROPERLY SEATED.

GENERAL SAFETY INFORMATION

CAUTION: Before installing, make sure you are compliant with area classifications, failure to do so may result in bodily injury, death and property damage. Do not attempt installation until you are familiar with the following procedures. All installation must comply with the applicable Electrical Code.

Make sure that the circuit is De-energized before starting installation or maintenance.

Verify that the installation is grounded. Failure to ground will create electrical shock hazards, which can cause serious injury and or death.
Important: Please read these instructions carefully before installing or maintaining this equipment. Good electrical practices should be followed at all times and this data should be used as a guide only.

The Larson Electronics HLSW-xx-SP0003 Hazardous Location Mushroom Push Button provides robust motor control in combustible sites. This momentary action accessory contains two contact blocks and takes on a mushroom head design. The push button is NEMA 4X and IP66 rated, making it suitable for rugged environments.

Application Information:

These devices are Intended for use in 30.5mm device openings in control station covers with panel thickness of 0.04”-0.25”. See Figure 1 for gasket & spacer application.

WARNING - Use of specified DIN Rails is required when mounting Contact Blocks to assure proper height alignment, correct plunger travel, and safe operation of the contacts.

Device shall be installed in a minimum IP54 rated enclosure where the suitability is determined in the end application. For Restricted Breathing Applications, the enclosure shall have a test port.

Device must be mounted to a flat surface in a suitable "Ex e" increased safety enclosure and installed per these instructions.

To maintain the IP66 rating or Dust Protection method "tb", the sealing gasket must be installed in accordance with these installation instructions.

All conductors shall be suitable for both the minimum ambient and the maximum temperature achieved in service. 105C rated wire (or greater) is recommended when installing.

Contact blocks must be mounted to provide a minimum of 10 mm clearance to any conductive surfaces and minimum creepage of 16mm.

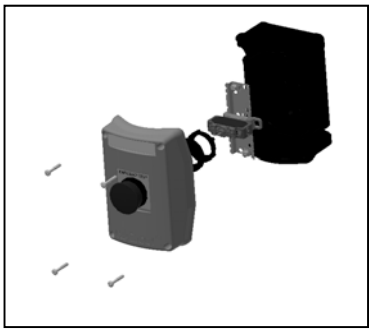

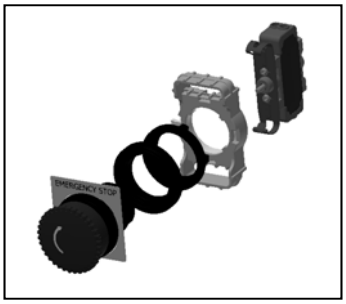

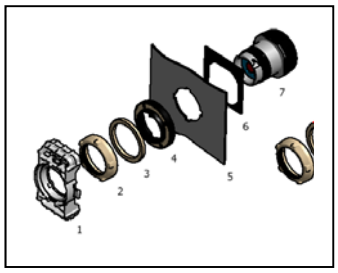

FIGURE 1

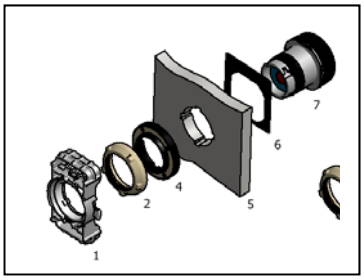

FIGURE 2

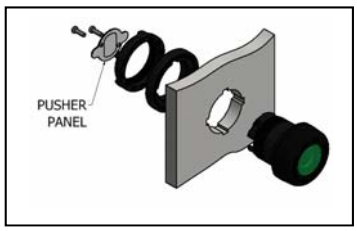

FIGURE 3

3. Installation Instructions

Assemblies are intended for use with Control Station Enclosures for Din Rail (V-Notched 35mm x 7.5mm DIN rail) or Panel Mount applications.

INSTALLATION NOTE – See Figs. 4 thru 7 below for proper orientation of actuator to cover to insure correct installation of contact block & modules.

Intended for installation on Type 1/3/3R/4/4X/12/13* and IP66 Enclosures.
*-All Actuators are Type 13 except Keyed Rotary

See below for min. and max. panel/cover thicknesses.

WARNING - For certain enclosure cover thicknesses (See Below), use of specified spacer is required to maintain IP Rating. Without spacer on a thin wall panel, the locknut may not travel the required distance to compress the gasket seal.

FIGURE 1- Application on Thin Wall

1. Bracket for mounting contact blocks.
2. Actuator Locknut
3. Spacer when required for thin cover or panel***
4. Silicone gasket - (install with Flat Ribbed surface against inside of cover)
5. Panel or Enclosure Cover 0.04”-0.15” Thick.
6. Legend Plate when used for application
7. Actuator

FIGURE 2- Application on Thick Wall

1. Bracket for mounting contact blocks.
2. Actuator Locknut
3. Silicone gasket – (install with Flat Ribbed surface against inside of cover)
4. Panel or Enclosure Cover 0.16”-0.25”.
5. Legend plate when used for application
6. Actuator

*****Panels/Covers 0.04” to 0.15” thick require a spacer (Install Item 2, See Fig. 1 at left)**

*****Panels/Covers 0.16” to 0.25” thick do not require a spacer (Do Not Install Spacer, See Fig. 2 at left)**

FIGURE 3- Illuminated Momentary Pushbutton or 3 Pole Momentary Pushbutton

- INSTALL PUSHER PANEL AFTER MOUNTING ACTUATOR TO COVER.

Orientation of Actuator to Cover when **installing Push Button & Pilot Light Assemblies on a V-Notched 35mm x 7.5mm Din Rail**

RULE - The Male Keyway on the Actuator will always follow the orientation of the Din Rail.

When the enclosure is in its mounted position and the din rail is vertical, the male keyway of actuator housing is to be positioned at 12 o’clock.

When the enclosure is in its mounted position and the din rail is horizontal, the male keyway of actuator housing is to be positioned at 3 o’clock.

Typical installation of Size 1 Control Stations is with the Din Rail is in a Vertical position.

Depending on the orientation of the enclosure in Size 2 applications, be sure that the installation of the actuator follows the same rule whether the enclosure is mounted vertically or horizontally.

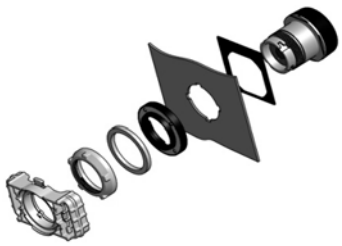

Install the actuator with regard to the Din Rail orientation, not the enclosure.

This will insure the four hole pattern on the inside of the actuator that depresses the contact blocks will be parallel with the Din Rail.

This will be important if installing an accessory lockout to insure proper function of contact operation.

See Illustrations in left-hand column.

Orientation of Actuator to Cover when installing **Rotary Selectors when the contact block(s) are Din-Rail Mounted**

Rotary Actuators are available, per application described. This will insure correct indication of handle to legend plate markings.

RULE - The Male Keyway on the Rotary Actuator will always follow the orientation of the Din Rail.

When the enclosure is in its mounted position and the din rail is vertical, the male keyway is to be positioned at 12 o'clock **(See Fig. 4)**.
MUST use Rotary Catalog numbers ending in **"V"**.

When the enclosure is in its mounted position and the din rail is horizontal, the male keyway is to be positioned at 3 o'clock **(See Fig. 5)**.
MUST use Rotary Catalog numbers ending in **"H"**.

Orientation of Actuator to Cover when installing **Push Button & Pilot Light as Panel Mount**

Figure at right shown as installed in enclosure Size1a,1b,1c (& Size 2a with 2 device cover).

RULE - The Male Keyway of actuator housing will always be positioned at 12 o'clock when installing panel/cover mounted actuators in all Size 1 Control Stations. For the size 2a two device cover, mounted vertically, the same rule applies. The contact block/pilot light module mounting bracket will be in a horizontal position with the locking tab facing up or down **(Figure 6)**.

Make NOTE of angled tabs on bracket and actuator housing. Be sure tabs on bracket are in line with actuator housing angled slot.

Do not force bracket onto housing.

For the size 2a four device and size 2c six device covers, the Male Keyway of actuator housing will always be positioned at 3 o'clock when installing panel/cover mounted actuators with the enclosure in a vertical position. Mounting bracket will be in a vertical position **(See Fig. 7).**

See Illustrations in left-hand column.

Orientation of Actuator to Cover when installing **Rotary Selectors in Panel Mount Application**

Rotary Actuators are available with catalog numbers ending in **"V"** for Vertical orientation and **"H"** for Horizontal orientations, per application described. This will insure correct indication of handle to legend plate markings.

RULE - The Male Keyway on the **"V"** Series Rotary Actuator will always be positioned at 12 o'clock when installing panel/cover mounted actuators in all Size 1 Control Stations. For size 2a two device panel/cover mounted actuators the same rule applies.

MUST *use Rotary Catalog numbers ending in* ***"V"****.* The mounting bracket will be in a horizontal position with the locking tab facing up or down (See Example **Figure 6**).

RULE - For the size 2a four device and size 2c six device covers the Male Keyway on the **"H"** Series actuator will always be positioned at 3 o'clock when installing actuators. as panel/cover mount.

MUST *use Rotary Catalog numbers ending in* ***"H"****.* The mounting bracket will be in a vertical position with the locking tab facing left or right (See Example **in Fig. 7**).



Fig. 4 *- Size 1 with* **Vertical Din Rail – Keyway at 12 o'clock**



Fig. 5 - Size with Horizontal Din Rail – Keyway at 3 o'clock

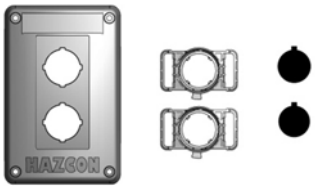

Fig 6 - Size 1 with Panel Mount Bracket -Keyway at 12 o'clock



Fig. 7 - Size 2 with Panel Mount Bracket – Keyway at 3 o'clock



Install bracket with angled tabs in line with actuator housing slots.
NOTE 45 º edges.
LOCK INTO POSITION ON ACTUATOR AS SHOWN.