LARSON ELECTRONICS
9419 US-HWY 175
KEMP, TX 75143
(800) 369-6671 | sales@larsonelectronics.com

INSTALLATION, OPERATION & MAINTENANCE DATA SHEET

For "EPL-AEB" SERIES

Installation Instructions

This junction box must be installed by trained, qualified and competent personnel. Installation must comply with local, state and national regulations, as well as safety practices for this type of equipment.

WARNING: Electrical power **must** be **OFF** during installation. **Disconnect** primary power source and **lock out**.

The mounting location must be flat and provide proper clearance, rigidity and strength to support the enclosure and all contained devices. (Refer to Figures 1 & 2)

Larger enclosures are equipped with factory installed hinges. Enclosures should be mounted with hinges on the left. **Do not** mount the enclosure with hinges on the **top** or **bottom** side. (See Figure 3)

Securely fasten the enclosure to the mounting location, using ½" diameter steel mounting bolts and washers, or washer head bolts. Install sealing fittings and conduit using an approved electrical conducting type lubricant on the threads. The conduit thread connections must be tapered pipe thread conforming to ANSI/ASME B1.20.1. A minimum of five (5) full threads engagement is required for all conduit connections. Conduit sealing fittings, approved for the specific hazardous location where the enclosure is used, must be installed within 18" of the enclosure. All unused conduit openings must be plugged using a close-up plug approved for the specific hazardous location where the enclosure is used. Plugs must be tightly installed with a minimum engagement of five (5) full threads.

IMPORTANT: Install only U.L. listed and CSA certified auxiliary control devices for hazardous locations (Long and Extra-Long styles only). Refer to individual operator installation sheet for installation details. The minimum wall thickness of counter-bore (where required) and operator spacing are to be determined from the dimensional chart on Pages 2 & 3.

NOTE: If installing a breather and/or drain, make certain they are suitable for the specific hazardous location where they are to be used. Also, provide a protective device to shield the breather and drain during hose-down operations.

Inspect and clean the machined flange (flam path) surfaces of both the cover and box. Surfaces must be smooth, free of nicks, scratches, dirt or any foreign particle build up that would prevent a proper seal. Surface must seat fully against each other to provide a proper explosion-proof joint. Clean surfaces by wiping with a clean, lint-free cloth.

Apply a light coat of lubricant to flange surfaces and close the cover. Install and tighten all cover bolts to 30 ft. lbs. Make certain that no cover bolts are omitted. Use only those bolts supplied with the enclosure. Check the bolted joint with a 0.0015" thick feeler gauge. The gauge **must not enter** the joint more that 1/8" at any point.

NOTE: Missing bolts or an improper joint can result in an explosion, creating a potential for physical injury or property damage.

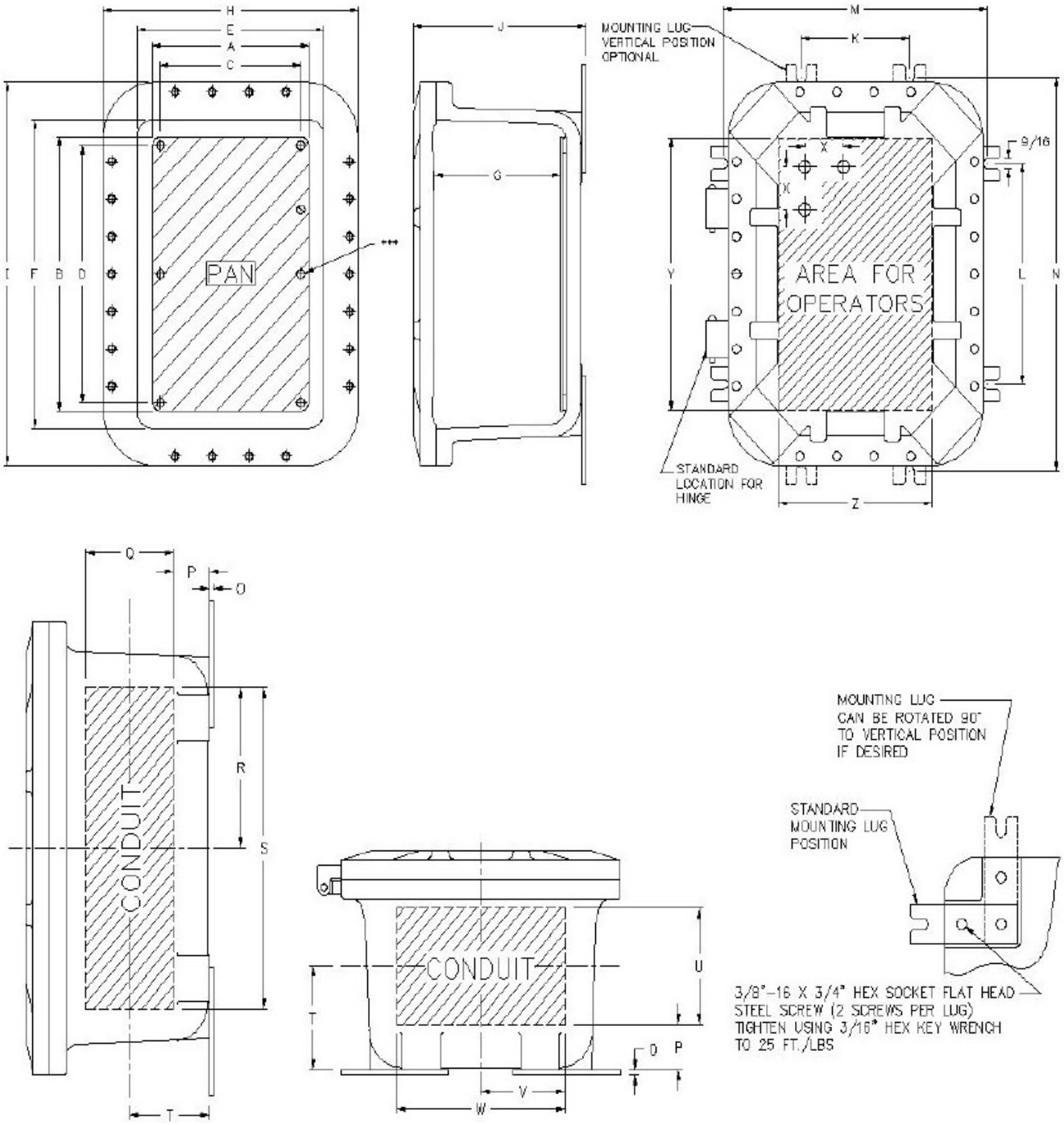
H
E
A
C
I
F
B
D
PAN
J
G
MOUNTING LUG
VERTICAL POSITION
OPTIONAL
M
K
X
K
9/16
Y
AREA FOR
OPERATORS
L
N
STANDARD
LOCATION FOR
HINGE
Z
Q
P
O
R
S
CONDUIT
T
CONDUIT
U
T
O
P
V
W
MOUNTING LUG
CAN BE ROTATED 90°
TO VERTICAL POSITION
IF DESIRED
STANDARD
MOUNTING LUG
POSITION
3/8"-16 X 3/4" HEX SOCKET FLAT HEAD
STEEL SCREW (2 SCREWS PER LUG)
TIGHTEN USING 3/16" HEX KEY WRENCH
TO 25 FT./LBS

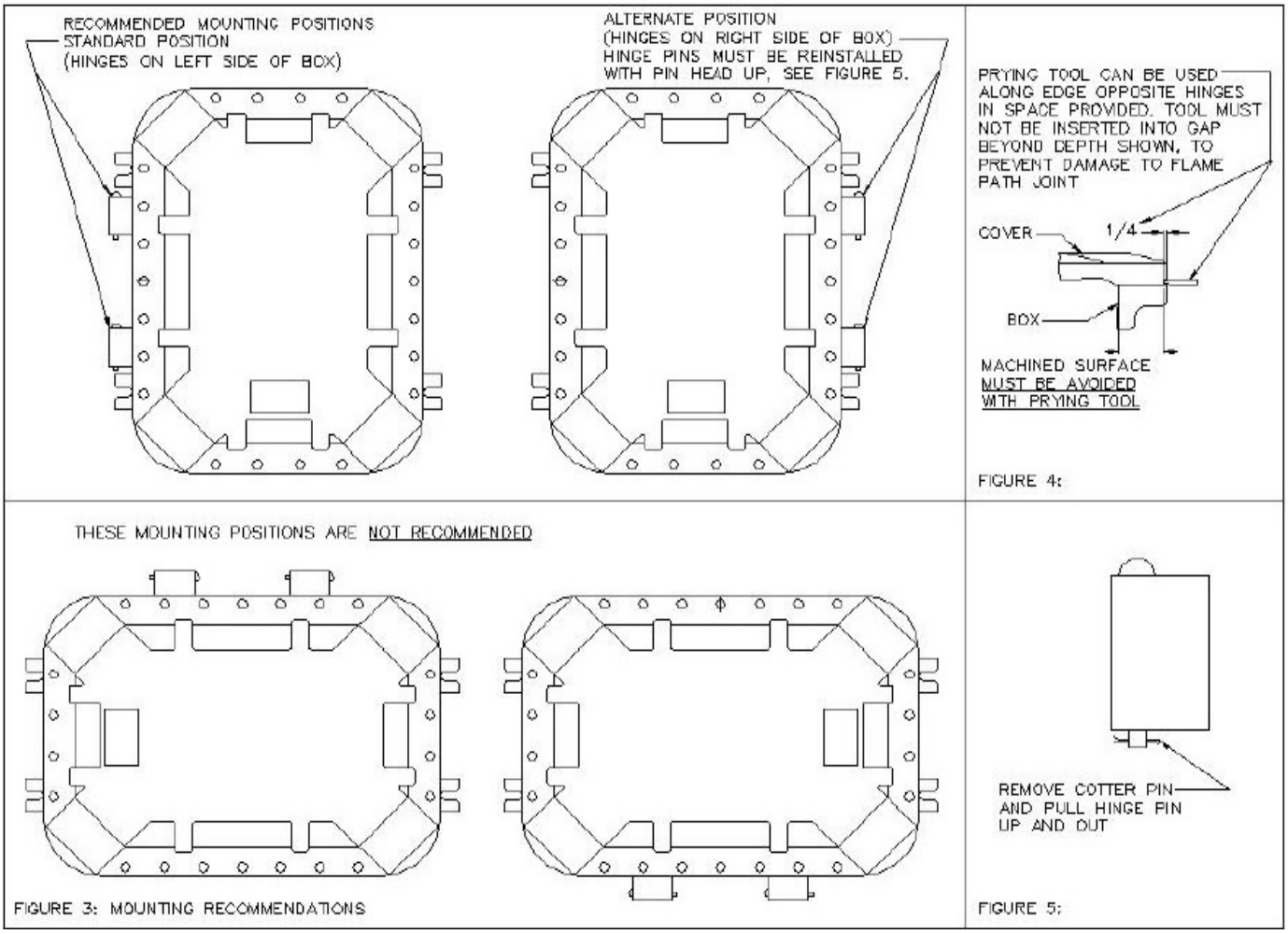

MAINTENANCE INSTRUCTIONS

After installation, this junction box should be inspected at regular intervals. A visual inspection should ascertain that all cover bolts are installed and still tight; that all conduit connections are intact and free of corrosion, and that the enclosure mounting bolts are tight and in good condition.

If the enclosure must be opened for servicing, to check or replace internal devices and apparatus, the following procedures should be followed.

WARNING: Before servicing the enclosure, be certain the electrical power is OFF. Disconnect the enclosure from primary power source and lock out.

Remove all cover bolts. Clean and inspect. Replace any corroded, bent or otherwise damaged bolts with new, factory authorized bolts obtained from an authorized distributor.

Open enclosure. Do not use hammer, screwdriver, or any prying tool to open cover, except as shown in Figure 4.

Inspect cover hinges. If hinges are damaged or do not function properly, contact a factory authorized service representative for hinge replacement and installation.

Inspect machined flange (flame path) surfaces. Surfaces must be smooth, free of nicks, scratches, dirt or any foreign particle build-up that would prevent a proper seal. Should surface be damaged contact factory. Never attempt to rework surfaces by sanding, grinding, ect. Surfaces must seat fully against each other to provide proper explosion-proof joint.

Inspect water exclusion gasket. If gasket is damaged, **do not** attempt field replacement or repair.

Contact a factory authorized representative for a replacement cover. When removing gasketed cover for replacement, **do not** detach hinge body from cover. (NOTE: Optional hinges on 664, 886, 8104, & 8106 enclosures **must** be removed from cover).

Remove cover and hinge body from enclosure by removing the hinge pins. (see Figure 5) The damaged gasket can be removed from the cover and the cover without gasket can be safely used in Class I & II hazardous (classified) locations, however the enclosure may **not** be raintight or hosedown tight.

Clean flange surface by wiping with a clean, lint-free cloth. Apply a light coating of lubricant to flange surfaces and close cover. Install and tighten **all** cover bolts to 30 ft. lbs. Make certain no cover bolts are omitted. Use **only** factory authorized bolts. Check the flame joint with a .0015” feeler gauge. The gauge must not enter the flame joint more that 1/8” at any point. Missing bolts or an improper flame joint can result in an explosion, creating a potential for physical injury and property damage.

Technical information, advice and recommendations contained in these documents is based on information that Larson Electronics believes to be reliable. All the information and advice contained in the documents is intended only for use by persons having been trained and possessing the requisite skill and know-how and to be used by such person only at their own discretion and risk. The nature of these instructions is informative only and does not cover all of the details, variations or combinations in which this equipment may be used, its storage, delivery, installation, check out, safe operation, and maintenance. Since conditions of use of the product are outside of the care, custody and control of Larson Electronics, the purchaser should determine the suitability of the product for his intended use, and assumes all risk and liability whatsoever in connection therewith.

LARSON ELECTRONICS
9419 US-HWY 175
KEMP, TX 75143
(800) 369-6671 | sales@larsonelectronics.com

INSTRUCTIONAL DATA SHEET

"EPL-AEB" SERIES

FOR DRILLING & TAPPING OF CONDUIT OPENINGS IN U.L. LISTED, CSA CERTIFIED, CAST ALUMINUM BOXES FOR HAZARDOUS LOCATIONS

GENERAL INSTRUCTIONS & REQUIREMENTS FOR DRILLING & TAPPING IN FIELD.

1.) Standard NPT threads (with a 3/4" per foot taper) **must** be used for all conduit openings.

2.) Field drilling and tapping of the side walls of blank boxes may be done, provided the location of conduit openings meets the specifications of Chart 1, and minimum wall thickness meets the dimensions shown on Charts 2 & 3. Use Chart 1 to determine the maximum quantity and size of conduit openings permitted.

NOTE: 1/2" trade size is the minimum allowable size for any conduit opening. Refer to Chart 4 for maximum allowable conduit sizes.

3.) **CLASS I, DIVISION 1 & CLASS II LOCATIONS** require boxes with a wall thickness sufficient to provide a minimum of five (5) full threads. (See Chart 2)

NOTE: Conduit opening gaging requirement "+1/2 to +3-1/2 turns deeper than nominal" in lieu of the "+1 turn of nominal" described in ANSI / ASME B1.20.1

4.) **CLASS II LOCATIONS, WHEN THE BOX IS NOT SUPPORTED BY THE CONDUITS** require a wall thickness sufficient to provide a minimum of 3-1/2 full threads. (See Chart 3)

5.) After the size of conduit openings has been determined for specific enclosures, measure the wall thickness and refer to the specific chart per the following steps:

A.) 5 Full Thread Reference Chart 2.

B.) 3-1/2 Full Thread Reference Chart 3.

6.) If insufficient wall thickness is encountered, consult the factory.

INSTALLATION PRECAUTIONS

1.) For proper procedure to be used for opening box/cover joint, refer to the general installation sheet, Form K0983.

2.) Before closing the enclosure, be sure to wipe the ground flange surfaces with a clean cloth to remove any dirt or foreign particles. Any dirt on the flanges can prevent a tight seal of the enclosure. The flanges should then be given a light coating of lubricant.

3.) **Always** install **all cover bolts** to secure the enclosure. Missing bolts can result in explosions in hazardous areas.

REMEMBER TO SAVE ONE OF THESE SHEETS FOR MAINTENANCE PERSONNEL.

Chart 1: Minimum Centers for Drilled & Tapped Openings for Conduits.
(Allows for locknut, bushing & union clearance)

SIZE	FORM	½	¾	1	1¼	1½	2	2½	3	3½	4	5	6
½	(1) MIN	1 3/16											
	(2) PRE	1 3/8											
	(3) GU	1 5/8											
¾	(1) MIN	1 3/8	1 ½										
	(2) PRE	1 ½	1 5/8										
	(3) GU	1 ¾	1 13/16										
1	(1) MIN	1 ½	1 ¾	1 13/16									
	(2) PRE	1 ¾	1 7/8	2									
	(3) GU	1 7/8	2	2 1/8									
1¼	(1) MIN	1 11/16	1 15/16	2 1/16	2 5/16								
	(2) PRE	1 15/16	2 1/16	2 ¼	2 ½								
	(3) GU	2 1/16	2 ¼	2 5/16	2 ½								
1½	(1) MIN	1 15/16	2 1/16	2 3/16	2 ½	2 5/8							
	(2) PRE	2 1/8	2 ¼	2 3/8	2 5/8	2 ¾							
	(3) GU	2 3/16	2 9/32	2 7/16	2 5/8	2 ¾							
2	(1) MIN	2 ¼	2 3/8	2 9/16	2 13/16	2 15/16	3 3/16						
	(2) PRE	2 3/8	2 ½	2 ¾	3	3 1/8	3 3/8						
	(3) GU	2 ½	2 19/32	2 ¾	3	3 1/8	3 3/8						
2½	(1) MIN	2 7/16	2 9/16	2 ¾	3	3 1/8	3 3/8	3 5/8					
	(2) PRE	2 5/8	2 ¾	3	3 ¼	3 3/8	3 5/8	4					
	(3) GU	3 1/8	3 7/32	3 3/8	3 9/16	3 11/16	4	4 5/8					
3	(1) MIN	2 13/16	2 15/16	3 1/16	3 5/16	3 7/16	3 ¾	4	4 5/16				
	(2) PRE	3	3 1/8	3 3/8	3 5/8	3 ¾	4	4 3/8	4 ¾				
	(3) GU	3 9/16	3 21/32	3 13/16	4	4 1/8	4 7/16	5 1/16	5 ½				
3½	(1) MIN	3 1/8	3 ¼	3 3/8	3 5/8	3 ¾	4 1/16	4 5/16	4 5/8	4 15/16			
	(2) PRE	3 3/8	3 ½	3 5/8	3 7/8	4	4 3/8	4 5/8	5	5 3/8			
4	(1) MIN	3 7/16	3 9/16	3 11/16	3 15/16	4 1/16	4 3/8	4 5/8	4 15/16	5 ¼	5 9/16		
	(2) PRE	3 ¾	3 7/8	4	4 ¼	4 3/8	4 ¾	5	5 ¾	5 5/8	6		
5	(1) MIN	4 1/8	4 ¼	4 3/8	4 5/8	4 ¾	5	5 ¼	5 9/16	5 7/8	6 3/16	6 13/16	
	(2) PRE	4 3/8	4 ½	4 5/8	4 7/8	5	5 3/8	5 5/8	6	6 ¼	6 5/8	7 ¼	
6	(1) MIN	4 ¾	4 7/8	5	5 ¼	5 3/8	5 5/8	5 7/8	6 3/16	6 ½	6 13/16	7 7/16	8 1/8
	(2) PRE	5	5 1/8	5 ¼	5 ½	5 5/8	6	6 ¼	6 5/8	7	7 ¼	8	8 5/8
Approx. O.D. of:	LOCKNUT	1 ¼	1 1/8	1 11/16	2 3/16	2 7/16	3	3 7/16	4 3/16	4 13/16	5 3/8	6 11/16	7 15/16
	BUSHING	1	1 ¼	1 ½	1 15/16	2 13/64	2 5/8	3 7/32	3 7/8	4 7/16	5	6 ¼	7 3/8
	CONDUIT	7/8	1 1/16	1 3/8	1 11/16	1 15/16	2 3/8	2 7/8	3 ½	4	4 ½	5 9/16	6 5/8

(1) Minimum spacing required to provide clearance over locknuts and bushings.
(2) Preferred - More liberal spacings between centers of conduits to be used whenever possible.
(3) GU - When Listed "GU" series unions (½" thru 3") are used, additional spacing between conduits will be required, as specified above.

MINIMUM SPACING OF CONDUIT FROM SIDES & BACK												
Conduit Size	1/2	3/4	1	1 1/4	1 1/2	2	2 1/2	3	3 1/2	4	5	6
Dim. "A" *	1 1/2	1 5/8	1 3/4	1 7/8	2	2 1/4	2 1/2	2 3/4	3	3 1/4	3 7/8	4 3/8

*Note: If Listed "GU" series unions are being used (½" thru 3"), additional space for clearance may be required. Check dimensions of fittings being used.

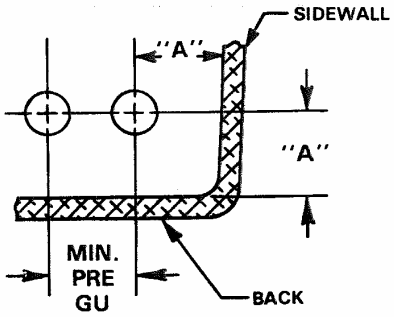

Chart 2: Required wall thickness for five (5) full threads engagement per U.L. 886 Standards.

Class I, Division I
Class II **Supported by Conduit**

CONDUIT SIZE	MINIMUM NUMBER OF FULL THREADS	MINIMUM WALL THICKNESS
½" & ¾"-14	5 (1)	3/8"
1", 1¼", 1½" & 2"-11½	5 (1)	7/16"
2½", 3", 3½", 4", 5" & 6"-8	5 (1)	5/8"

(1) A box used may have thicker walls than required. For thicker walled boxes, the inner end of each conduit opening shall be smooth and well-rounded, as shown below.

Chart 3: Required wall thickness for 3-1/2 full threads engagement.

Class II Locations **Not Supported by Conduit**

CONDUIT SIZE	MINIMUM NUMBER OF FULL THREADS	MINIMUM WALL THICKNESS
½" & ¾"-14	3½ (1)	¼"
1", 1¼", 1½" & 2"-11½	3½ (1)	5/16"
2½", 3", 3½", 4", 5" & 6"-8	3½ (1)	7/16"

(1) Same as shown for Chart 2.

NOTE:

1) Conduit openings must be tapped to a depth which allows the conduit to be fully engaged.
2) **Do not** over-tap conduit openings; the conduit must tighten fully **without** bottoming-out on the unthreaded area of the conduit.
3) Conduit opening gaging requirement: "+1/2 to +3-1/2 turns deeper than nominal".

RECOMMENDED TAP DRILL

TAPPED HOLE SIZE - NPT	TAP DRILL SIZE (DIA.)
1/2" - 14	23/32"
3/4" - 14	59/64"
1" - 11-1/2	1-5/32"
1-1/4" - 11-1/2	1-1/2"
1-1/2" - 11-1/2	1-47/64"
2" - 11-1/2	2-7/32"
2-1/2" - 8	2-5/8"
3" - 8	3-1/4"
3-1/2" - 8	3-3/4"
4" - 8	4-1/4"
5" - 8	5-5/16"
6" - 8	6-23/64"

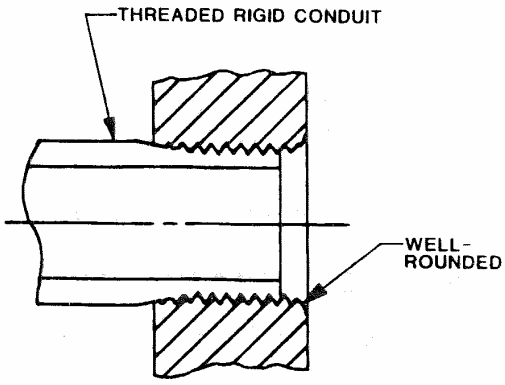

CONDUIT OPENING WITHOUT CONDUIT STOP