INSTALLATION - OPERATION MANUAL
HAZARDOUS LOCATION
EPH-CH-WM SERIES
HEATER

WARNING! DO NOT ATTEMPT TO INSTALL, OPERATE, OR SERVICE THIS PRODUCT BEFORE READING ALL INSTRUCTIONS CAREFULLY. FAILURE TO COMPLY WITH THESE INSTRUCTIONS COULD RESULT IN FIRE, PERSONAL INJURY AND/OR PROPERTY DAMAGE! RETAIN INSTRUCTIONS FOR FUTURE REFERENCE.

DESCRIPTION

These hazardous location heaters have been designed for installation in areas where potentially explosive, flammable vapors may be in the atmosphere, but a comfortable range of heat is maintained and desired.

REQUIRED CLEARANCE

A 9" minimum space from the bottom of the heater to the floor is required for ample airflow space. DO NOT mount directly on the floor.

SPECIFICATIONS

Temperature Code: Do not install in areas where vapors or gases having an ignition temperature less than 280^{0}C (536^{0}F) for T-2A models, and 180^{0}C (356^{0}F) for T-3A models.

Models with standard outlet box. See page 4.
Ratings: Class 1, Groups B, C, and D. Division 1 and 2, T-2A (280^{0}C/536^{0}F) or T-3A (180^{0}C/356^{0}F) depending on specific wattage models. NEMA 4.

Models with optional control box. See page 4.
Ratings: Class 1, Groups C and D. Division 1 and 2, T-2A (280^{0}C/536^{0}F) or T-3A (180^{0}C/356^{0}F) depending on specific wattage models.

Models with optional T1 or T2 thermostat. See page 4.
Ratings: Class 1, Groups C and D. Division 1 and 2, T-2A (280^{0}C/536^{0}F) or T-3A (180^{0}C/356^{0}F) depending on specific wattage models.

For additional information on Div., Class and Groups, refer to NEC Article 500 HAZARDOUS (CLASSIFIED) LOCATIONS.

MAINTENANCE

Always disconnect the heater from the power source before performing any service or maintenance.

1. Keep heater clean, especially the heating elements.
2. Remove dust, lint and accumulation of other material.
3. Never allow the heater to operate with restriction to the free circulation of air through it.
4. Check that the heater has not been damaged or deformed, and that all conduit joints are secure.

IMPORTANT SAFETY INFORMATION

Read all instructions before using this heater.

WARNING: Do not install in areas where vapors or gases have an ignition temperature less than the rating of the heater. Heater ratings are: 280^{0}C (536^{0}F) for T-2A models and 180^{0}C (356^{0}F) for T-3A models. Note: Information regarding ignition temperatures is contained in NFPA 325M "Fire Hazard Properties of Flammable Liquids, Gases and Volatile Solids" available from the National Fire Protection Association, Batterymarch Park, Quincy, MA 02269.

WARNING: These heaters must not be operated in ambient temperatures exceeding 40^{0}C (104^{0}F). To assure heaters are not operated at temperatures exceeding the above, the heater should be controlled by a thermostat. This should be located at the same level as the heater.

1. Comply with the National Electric Code definition of Class 1, Division 1 & 2, Group B, C and D hazardous locations, including areas where the potential for explosion and fire is high. Some potentially hazardous situations include, but are not limited to, flammable gases, chemical vapors, liquified petroleum or natural gas vapor from dry cleaning solvents; and other situations as detailed by the National Electric Code.

2. Do not install one unit above another.

3. Heaters must be mounted on a wall in a horizontal position, with the terminal end at the left. Never recess the heater into the wall.

4. During normal operation, this heater will develop high surface temperatures. To avoid possible injury, do not touch the top of the heater enclosure.

5. Never place any material or object on top of the heater enclosure. Never obstruct the flow of air through the unit.

6. Make certain incoming power conforms to the require ment of the heater.

7. Disconnect power supply to heater before servicing or inspecting any part of the heater. Failure to do so may result in electrical shock.

SAVE THESE INSTRUCTIONS

INSTALLATION

CAUTION: For ample airflow, a 9” minimum space from the bottom of the heater to the floor is required. DO NOT mount directly on the floor.

1. Attach the wall bracket with the “V” at the top. Use 3/8” bolts and wall anchors supplied by installer.
2. Hang the heater onto the “V” bracket, using the horizontal slots located on the rear housing panel.
3. Secure the heater by fastening the bottom, with the 1/4-20 screws furnished, to the bottom of the bracket. This may be done through the opening in the bottom of the heater. In some cases, the front housing panel can be removed for easier access.

WIRING INSTRUCTION and DIAGRAMS

1. This heater must be wired in accordance with local electrical and safety codes, as well as Article 501 of the National Electric Code for Class 1 Hazardous Locations.

2. An approved conduit seal (not included) must be provided at the entrance to the conduit box. WARNING: To prevent ignition of Group B Atmospheres, conduit runs must not exceed 3/4” in size, and all conduit runs 1/2” size and larger must have a sealing fitting connected within 2” of the terminal enclosure.

3. Connect one lead from each element to L1, and connect the other lead from each element to L2 (see Figs. A and B). For 600 volt units, the elements are wired in series, requiring connection of one lead from each element together (see Fig. C). For 3-phase units see Fig. G. Always observe the wiring diagram on the unit.

4. Any auxiliary control equipment, such as a disconnect switch, contactor or thermostat which is located within the hazardous location, must be specifically designed and approved for that hazardous location. NOTE: It is the users’ responsibility to assure that adequate controls and safety devices are installed with their electric heating equipment.

5. Heaters supplied with optional controls, are prewired at the factory. For heaters with the optional control box, remove the control box cover and connect power source to the line side of the disconnect switch (see Fig. D). Replace cover before applying power. For heaters supplied with the optional T1 or T2 thermostat, remove the thermostat cover and make connections (see Figs. E and F). Replace the cover and apply power.

CAUTION: If the possibility exists for the ambient temperature to exceed 40°C / 104°F, a thermostat should be installed in close promimity to the heater.

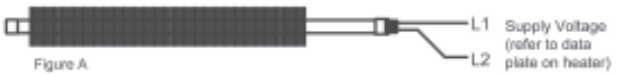

Figure A

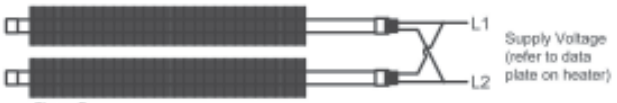

Figure B

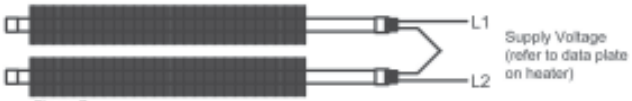

Figure C

NOTE: This unit must be protected by either “a circuit breaker acceptable for branch circuit protection” or by “a fuse acceptable for branch circuit protection such as a Class CC, G, H, J, K, L, R or T cartridge fuse or a Type S plug fuse”.

Description of Groups

-Suitable for both Division 1 and 2 locations.
-Approved for the following Class 1 groups:

Group B: Atmospheres containing hydrogen, fuel and combustable process gases containing more than 30% hydrogen by volume, or gases or vapors of equivalent hazard such as butadiene, ethylene oxice, propylene oxide, and acrolein.

Group C: Atmosheres such as ethyl ether, ethylene, or gases or vapors of equivalent hazard.

Group D: Atmospheres such as acetone, ammonis, benzene, butane, cyclopropane, ethanol, gasoline, hexane, methanol, methane, natural gas, naphtha, propane, or gases or vapors of equivalent hazard.

-Temperature Code: Do not install in areas where vapors or gases having an ignition temperature less than 280°C (536°F) for T-2A models, and 180°C (356°F) for T-3A models.

For additional information on Div., Class and Groups, refer to NEC Article 500 HAZARDOUS (CLASSIFIED) LOCATIONS.

OPERATING INSTRUCTIONS

This heater may be controlled by a thermostat or a contactor and thermostat. If control equipment is located in a hazardous location, it too must be approved for this location. It is essential that over-current protection be provided for the heater alone and should be of a value as near as possible to the current rating indicated on the heater data plate.

Do not operate the heater at voltages in excess of that stamped on the heater, since excess voltage will shorten heater life and cause high element temperatures. These may exceed allowable temperatures of operation in a hazardous atmosphere.

CAUTION: Never operate the heater with the front panel off. Air flow across the heating elements requires the front panel in place. Injury from hot heating elements is possible with the front panel removed.

Figure D

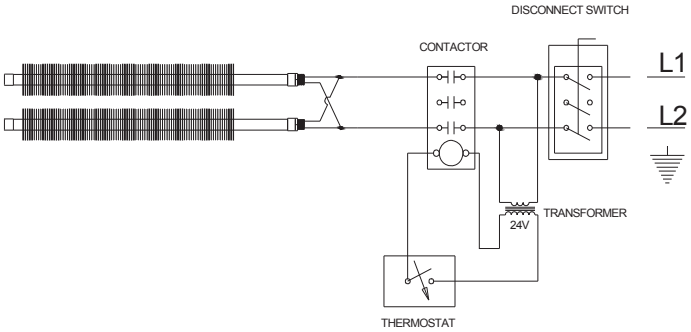

TYPICAL WIRING DIAGRAM FOR
SINGLE PHASE HEATER WITH
OPTIONAL CONTROL BOX

Figure E

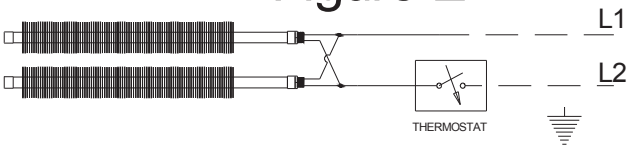

TYPICAL WIRING DIAGRAM FOR
SINGLE PHASE HEATER WITH
OPTIONAL T1 THERMOSTAT

Figure F

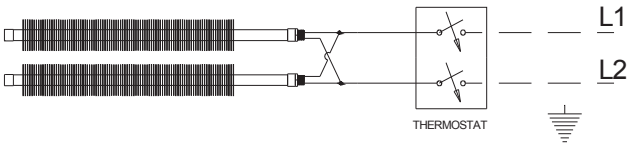

TYPICAL WIRING DIAGRAM FOR
SINGLE PHASE HEATER WITH
OPTIONAL T2 THERMOSTAT

Figure G

TYPICAL 3 PHASE WIRING

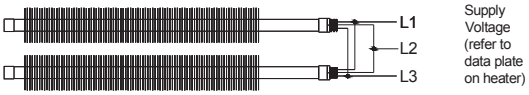

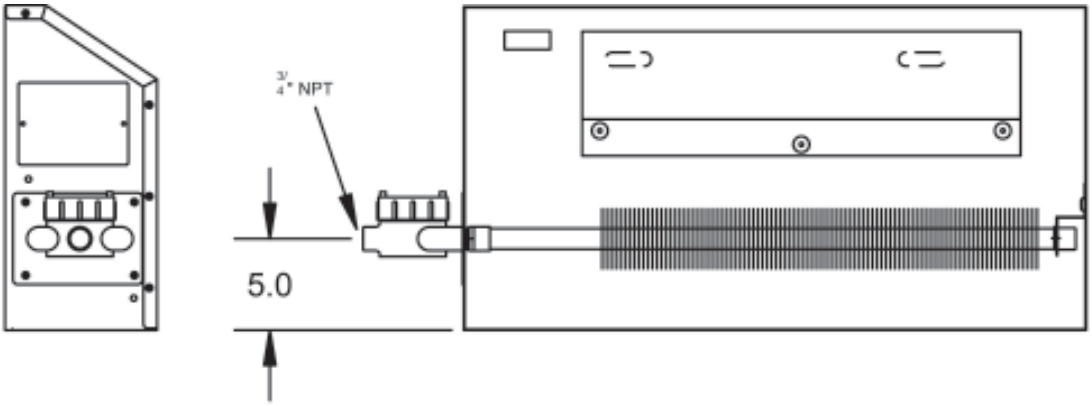

Models with standard outlet box.
Ratings: Class 1 ,Groups B,C, and D. Division 1 and 2, T-2A (280°C/536°F) or T-3A (180°C/356°F) depending on specific wattage models. NEMA 4.

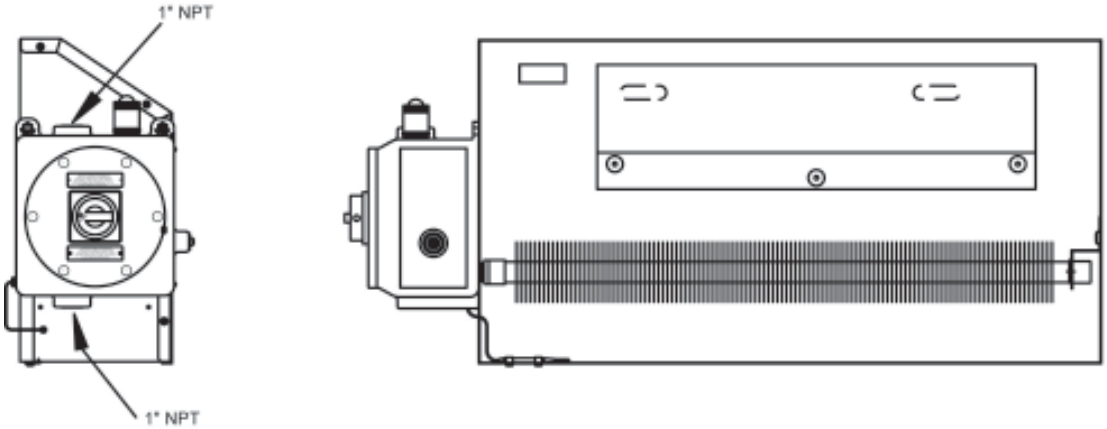

Models with optional control box.
Ratings: Class 1 ,Groups ,C, and D. Division 1 and 2, T-2A (280°C/536°F) or T-3A (180°C/356°F) depending on specific wattage models.

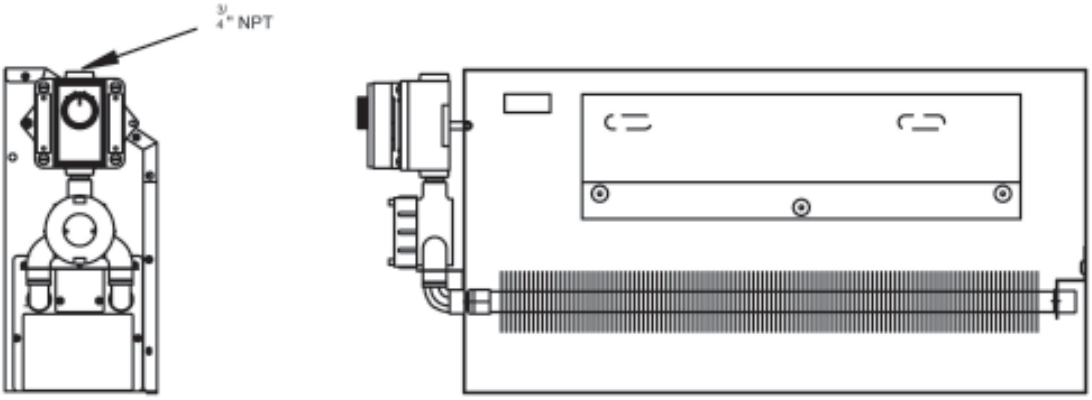

Models with optional T1 or T2 Thermostat.
Ratings: Class 1 ,Groups ,C, and D. Division 1 and 2, T-2A (280°C/536°F) or T-3A (180°C/356°F) depending on specific wattage models.