72W Emergency Fluorescent Light
(2) 4' Lamps - Emergency Battery Backup - ATEX/IECEx
Instruction Manual

Thank you for your purchase of the Larson Electronics ATEX-HALP-EMG-48-2L-T8-2X36W.

WARNING:

READ CAREFULLY BEFORE INSTALLING FIXTURE. RETAIN THESE INSTRUCTIONS FOR FUTURE REFERENCE.
CRITICAL SAFETY INSTRUCTIONS:

- INSTALLATION SHOULD ONLY BE CONDUCTED BY A QUALIFIED ELECTRICIAN IN ACCORDANCE WITH NEC AND ANY RELEVANT LOCAL BUILDING CODES.
- RISK OF FIRE OR ELECTRIC SHOCK. FIXTURE INSTALLATION REQUIRES KNOWLEDGE OF FIXT E ELECTRICAL SYSTEMS. IF NOT QUALIFIED, CONTACT A QUALIFIED ELECTRICIAN.
- BE CERTAIN ELECTRICAL POWER IS OFF BEFORE AND DURING INSTALLATION AND MAINTENANCE.
- MAKE SURE THE SUPPLY VOLTAGE IS THE SAME AS THE FIXT E RATED VOLTAGE.
- TO PREVENT WIRING DAMAGE OR ABRASION, DO NOT EXPOSE WIRING TO EDGES OF SHEET METAL OR SHARP OBJECTS. SUITABLE FOR DAMP LOCATIONS.

IMPORTANT

READ CAREFULLY BEFORE INSTALLING THIS FIXTURE. SAVE THESE INSTRUCTIONS FOR FUTURE REFERENCE. THE ATEX-HALP-EMG-48-2L-T8-2X36W MUST BE WIRED IN ACCORDANCE WITH NATIONAL ELECTRICAL CODE AND ALL APPLICABLE LOCAL CODES. PROPER GROUNDING IS REQUIRED FOR SAFETY.

WE STRONGLY ENCOURAGE ONLY A LICENSED ELECTRICIAN INSTALL, OPERATE AND MAINTAIN THIS PRODUCT. IF YOU ARE NOT QUALIFIED OR UNFAMILIAR WITH ANY ASPECT OF THIS INSTRUCTION SHEET, CONSULT AN ELECTRICIAN. THERE ARE NO SERVICEABLE PARTS INSIDE.

WARNING: MAKE SURE POWER IS TURNED **OFF** BEFORE STARTING THE INSTALLATION OR PERFORMING ANY MAINTENANCE.

RISK OF FIRE/ELECTRIC SHOCK – DISCONNECT POWER AT BREAKER BEFORE INSTALLING OR SERVICING.
RISK OF PERSONAL INJURY – FIXTURE MAY BECOME UNSTABLE OR DAMAGED IF NOT INSTALLED PROPERLY.
RISK OF BURN – ALLOW FIXTURE TO COOL BEFORE SERVICING.

WARNING:

USER SHOULD BE TRAINED IN THE PROPER USE AND MAINTENANCE OF THIS DEVICE. THIS LINE CORD IS INTENDED TO ALLOW OPERATORS TO EXTEND POWER TO EQUIPMENT WHEN STATIONARY OUTLETS ARE NOT READILY AVAILABLE.

IMPROPER USE OF THIS CORD, PLUG, AND RECEPTACLE CAN LEAD TO SERIOUS INJURIES OR DEATH TO PERSONNEL.

PERIODIC INSPECTION OF THE CORD IS NECESSARY.
THE CORD MUST BE ROUTINELY CHECKED FOR CUTS, BREAKS, OR ANY SEVERE ABRASIONS, AND IF ANY ARE FOUND, THE CORD MUST BE REPLACED BEFORE RESUMING USE.

The ATEX-HALP-EMG-48-2L-T8-2X36W Hazardous Area Fluorescent Light Fixture from Larson Electronics is ATEX/IECEx approved for Zones 1 and 2 and 21 and 22. This emergency light fixture is specifically designed to handle the rigors of wet and corrosive marine environments, and comes equipped with an added battery backup providing 3 hours of emergency runtime.

WIRING

Standard pigtail(flying leads) wiring

We strongly encourage a licensed electrician install this product, in all locations especially in outdoor areas where weatherproofing may be required. Universal voltage driver permits operation at 120-277V AC 50/60 Hz, or optional 12-24V DC.

Warning: *Check product label for correct input voltage!*

Attach supply line wires to the appropriate light fixture wires as shown in the diagram ➔



Secure each pair of wires according to the diagram. Utilize a junction box or similar device and take precautionary steps for weatherproofing all connections if installed in a location where water may come in contact with the unit. Ensure the unit is properly grounded and that wiring is done according to all local and national electrical/building codes.

Low Voltage DC

Connect power to power supply outputting low voltage between 12-24 Volts DC. This variable voltage allows greater versatility without affecting light output. Ensure deutsch connectors are properly connected (If applicable)

EMERGENCY BACKUP

This fluorescent light works, mounts and is wired like our ATEX-HALP-24-2L explosion proof fluorescent light fixtures. The main difference is that we add a battery backup unit that adds emergency light functionality to the fixture. This hazardous area emergency light will run the standard UL suggested 3 hours after power is lost. The light recharges the battery once electrical power is restored. Standard configuration includes a single emergency ballast that will run a single lamp at 900 lumens for 3 hours. The battery backup unit includes a switched leg for turning the light fixture on/off without kicking the unit into emergency mode.

SURFACE MOUNTING

Flange type aluminum mounts attached at each end of the fixture enables it to be simply secured to any surface. The mounts provide some shock absorbency protection while enabling the user to simply mount the fixture with the through-hole taps that protrude on each side of the fixture.

PENDANT MOUNTING

This light fixture can hang from the ceiling suspected by rigid pipe. Each fixture is equipped with either two 1/2", 3/4" NPT hubs, M20 or M25 hubs on either side of this fluorescent lamp. Operators will bring rigid pipe down to the threaded mounting ups. The wiring is fed down through the rigid pipe to one of the NPT hubs and tied to the fixture`s lead wires to complete the electrical connection. The remaining pendant hub provides support for the opposite end of the fixture.C

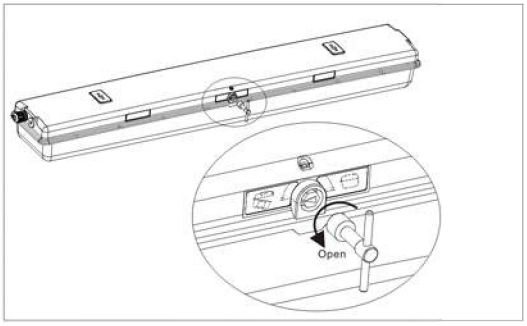

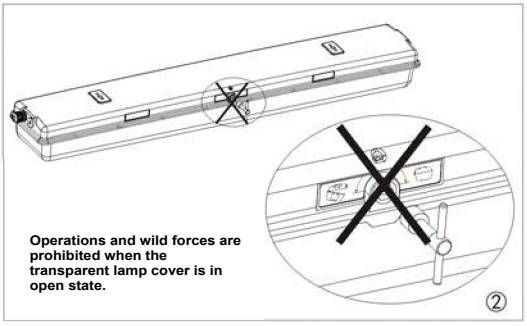

Operations and wild forces are prohibited when the transparent lamp cover is in open state.

②

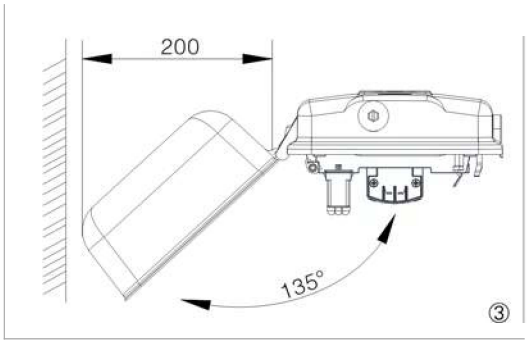

③

The bolts can be used for fixing reflectors in the place where there is high-frequency vibrations.

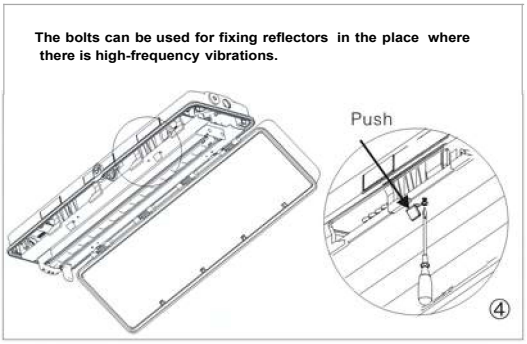

④

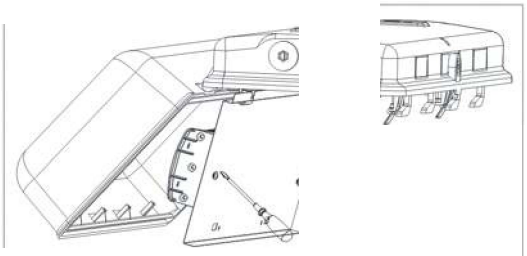

LED light source module fixed by screws, at the time of change,
Please loosen the screws!

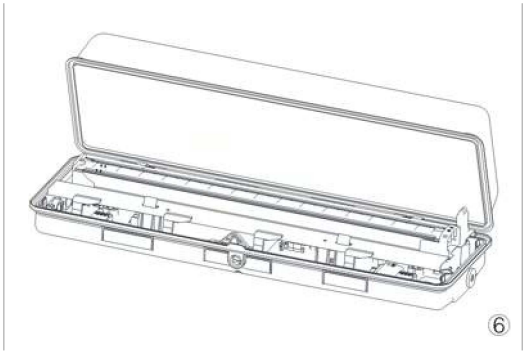

⑥

Warning: Please don't discharge or replace the battery in the explosive gas atmosphere but in a safe area.

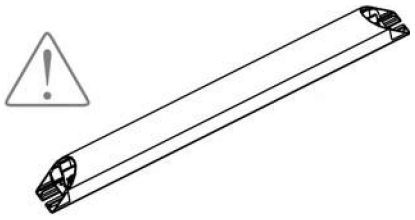

(7)

MAINTENANCE

Caution: To avoid personal injury, disconnect power to the light and allow the unit to cool down before performing maintenance.

Warning: Risk of electric shock.

1. Perform visual, mechanical and electrical inspections on a regular basis. We recommend routine checks to be made on a yearly basis. Frequency of use and environment should determine this. It is recommended to follow an Electrical Preventive Maintenance Program as described in NFPA 70B: Recommended practice for Electrical Equipment.
2. The lens should be cleaned periodically as needed to ensure continued photometric performance. Clean the lens with a damp, non-abrasive, lint-free cloth. If not sufficient, use mild soap or a liquid cleaner.
3. Inspect the cooling fins on the luminaire to ensure that they are free of any obstructions or contamination (i.e. excessive dust build-up). Clean with a non-abrasive cloth if needed.
4. Do not operate if the lens is cracked or damaged. All fasteners should be properly seated.

USE AND CARE

Unauthorized modification may impair the function and/or safety of this device and could affect the life of the equipment. Always check for damaged or worn out parts before using the device. Store it in a secure place out of the reach of children when not in use. Inspect for good working condition prior to storage and before re-use.

REPLACEMENT PARTS

The ATEX-HALP-EMG-48-2L-T8-2X36W is designed to provide years of reliable performance. Should the need for replacement parts arise, please contact Larson Electronics.

THESE INSTRUCTIONS MAY NOT COVER ALL DETAILS OR VARIATIONS OF THIS PRODUCT FOR YOUR EQUIPMENT OR INSTALLATION REQUIREMENTS. SHOULD FURTHER INFORMATION NOT COVERED BY THESE INSTRUCTIONS BE REQUIRED, PLEASE CONTACT LARSON ELECTRONICS BY EMAIL AT SALES@LARSONELECTRONICS.COM OR BY PHONE AT 1-800-369-6671 FOR FURTHER ASSISTANCE.

PLEASE VISIT LARSONELECTRONICS.COM FOR **WARRANTY** AND **RETURN** INFORMATION.