Assembly Instructions for cable gland

Operating temperature range -60°C +130°C

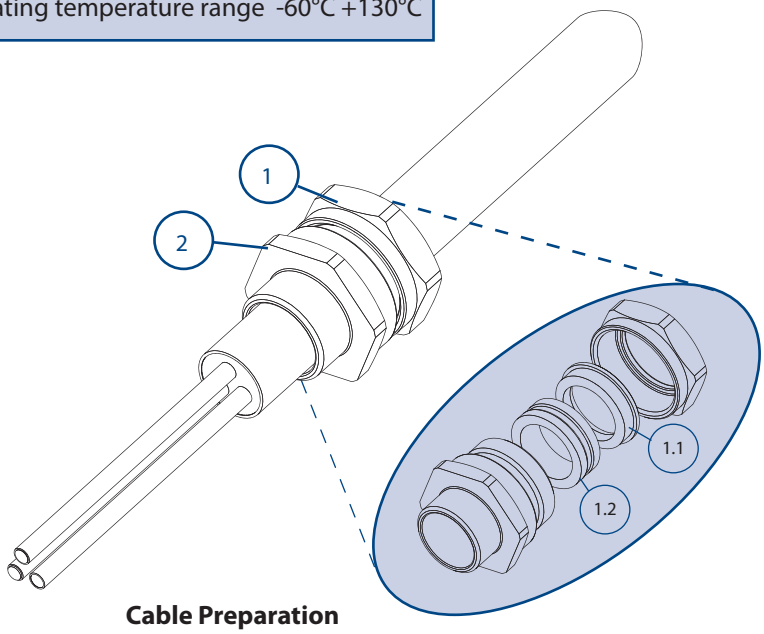

1. Backnut
1.1 Compression Spigot
1.2 Seal
2. Entry

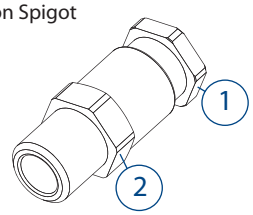

421/2K size only.
View for clarity only,
do not disassemble ① & ②.

Cable Preparation

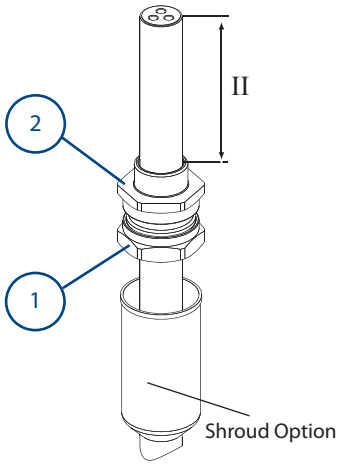

A
Allow sufficient length of cable, II, to suit equipment.
If required, fit shroud.
Pass cable through the cable gland as shown above.

Note : *If the equipment has a threaded entry, it may be advisable to screw the cable gland into the equipment to prevent twisting of the cable after Step B*

Gland Preparation

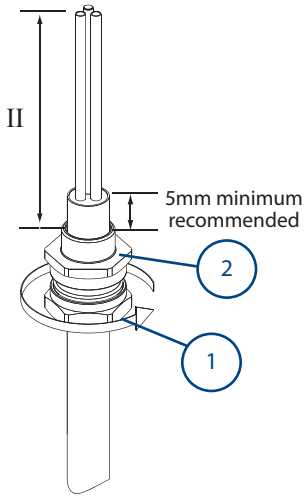

B
Unless already screwed into the equipment, hold the entry ② in position with a spanner/wrench to prevent rotation and tighten the backnut ① using a wrench/spanner until resistance is felt between the seal and cable. Then turn the back nut through a further half to one full turn to complete the inner seal. Locate the shroud over the cable gland, if applicable.

To ease wiring inside the equipment it may be beneficial to strip the outer sheath of the cable as shown above.

IMPORTANT: *Support the cable to prevent it from twisting*

IMPORTANT NOTE:
When used in Increased Safety applications, these cable glands may be used with braided cables where the braid and the outer sheath pass into the enclosure. The braid must then be suitably terminated within the enclosure. Braided cable is classed as unarmoured cable in the EN/IEC 60079 series standards for Exe applications.

SCHEDULE OF LIMITATIONS - Baseefa ATEX / IECEx:
1. The cable glands are only suitable for use with fixed apparatus, the cable for which must be effectively clamped and cleated elsewhere.
2. This cable gland has an operating temperature range of -60°C to +130°C.
3. A seal must be formed between the equipment and the cable gland to maintain the appropriate degree of protection against ingress of dust, solid objects and water.

NOTES - c CSA us:
1. The cable used must have extruded sealing (solid polymeric) completely surrounding the "core" (insulation and conductor), allowing for no holes or ventilation through the inner jacket or along the cores.
2. when used in Class 1 Division 2 Classified areas, are not suitable to be interfaced with an explosion proof enclosure containing arcing and sparking devices, unless installed in conjunction with an approved explosion proof sealing fitting.
3. These glands are suitable for use with Certified Marine Shipboard armoured / unarmoured cables constructed to CSA Standard 245 and IEEE45 / IEC 600092-353 Standards, or certified equivalent), for use on Shipboards and Offshore Rigs / Platforms.
4. Must comply with Canadian Electrical Code and National Electric Code requirements for threaded entries.
5. For Exe applications, a sealing washer or thread sealant may be required between the enclosure and the gland to maintain the IP rating of the enclosure.
6. When used with unarmoured or braided cables the glands are only suitable for use with fixed apparatus and the cable must be effectively clamped and cleated elsewhere.
7. This cable gland may only be installed when temperature is above -5°C. After completion of the installation, the assembly is then suitable for -60°C to +130°C.