Explosion Proof Cable Gland - 1/2" NPT - Nickel Plated Brass, ATEX Rated, N4X - 0.39-0.63" Cable OD
Instruction Manual

Thank you for your purchase of the Larson Electronics CGB-PXSS2K-NPB-20L-0.5IN.

WARNING:

READ CAREFULLY BEFORE INSTALLING FIXTURE. RETAIN THESE INSTRUCTIONS FOR FUTURE REFERENCE.
CRITICAL SAFETY INSTRUCTIONS:

- INSTALLATION SHOULD ONLY BE CONDUCTED BY A QUALIFIED ELECTRICIAN IN ACCORDANCE WITH NEC AND ANY RELEVANT LOCAL BUILDING CODES.
- RISK OF FIRE OR ELECTRIC SHOCK. FIXTURE INSTALLATION REQUIRES KNOWLEDGE OF FIXTURE'S ELECTRICAL SYSTEMS. IF NOT QUALIFIED, CONTACT A QUALIFIED ELECTRICIAN.
- BE CERTAIN ELECTRICAL POWER IS OFF BEFORE AND DURING INSTALLATION AND MAINTENANCE.
- MAKE SURE THE SUPPLY VOLTAGE IS THE SAME AS THE FIXTURE'S RATED VOLTAGE.
- TO PREVENT WIRING DAMAGE OR ABRASION, DO NOT EXPOSE WIRING TO EDGES OF SHEET METAL OR SHARP OBJECTS. SUITABLE FOR DAMP LOCATIONS.

IMPORTANT

READ CAREFULLY BEFORE INSTALLING THIS FIXTURE. SAVE THESE INSTRUCTIONS FOR FUTURE REFERENCE. THE CGB-PXSS2K-NPB-20L-0.5IN MUST BE WIRED IN ACCORDANCE WITH NATIONAL ELECTRICAL CODE AND ALL APPLICABLE LOCAL CODES. PROPER GROUNDING IS REQUIRED FOR SAFETY.

WE STRONGLY ENCOURAGE ONLY A LICENSED ELECTRICIAN INSTALL, OPERATE AND MAINTAIN THIS PRODUCT. IF YOU ARE NOT QUALIFIED OR UNFAMILIAR WITH ANY ASPECT OF THIS INSTRUCTION SHEET, CONSULT AN ELECTRICIAN. THERE ARE NO SERVICEABLE PARTS INSIDE.

WARNING: MAKE SURE POWER IS TURNED **OFF** BEFORE STARTING THE INSTALLATION OR PERFORMING ANY MAINTENANCE.

RISK OF FIRE/ELECTRIC SHOCK – DISCONNECT POWER AT BREAKER BEFORE INSTALLING OR SERVICING.
RISK OF PERSONAL INJURY – FIXTURE MAY BECOME UNSTABLE OR DAMAGED IF NOT INSTALLED PROPERLY.
RISK OF BURN – ALLOW FIXTURE TO COOL BEFORE SERVICING.

WARNING

TO AVOID THE RISK OF FIRE, EXPLOSION OR ELECTRIC SHOCK, THIS PRODUCT SHOULD BE INSTALLED, INSPECTED AND MAINTAINED BY A QUALIFIED ELECTRICIAN ONLY, IN ACCORDANCE WITH ALL APPLICABLE ELECTRICAL CODES.

TO AVOID ELECTRIC SHOCK:

- BE CERTAIN ELECTRICAL POWER IS OFF BEFORE AND DURING INSTALLATION AND MAINTENANCE.
- PRODUCT MUST BE CONNECTED TO A WIRING SYSTEM WITH AN EQUIPMENT-GROUNDING CONDUCTOR.

TO AVOID EXPLOSION:

- MAKE SURE THE SUPPLY VOLTAGE IS WITHIN THE VOLTAGE RATING.
- ENSURE THE MARKED T RATING IS LESS THAN THE IGNITION TEMPERATURE OF THE HAZARDOUS ATMOSPHERE.
- DO NOT OPERATE IN AMBIENT TEMPERATURES ABOVE THOSE INDICATED ON THE PRODUCT NAMEPLATE.
- DO NOT OPERATE IF THE LENS, CORD, SEALS, HOUSING, RECEPTACLES, ETC. IS CRACKED OR DAMAGED. IF SO, DISCONTINUE USE AND CONTACT MANUFACTURER FOR REPLACEMENT PARTS.
- ALL FASTENERS SHOULD BE PROPERLY SEATED.

The Larson Electronics CGB-PXSS2K-NPB-20L-0.5IN Explosion Proof Cable Gland provides secure and safe cable connections in combustible facilities. This unarmored, triple certified flameproof cable gland is constructed of nickel plated brass and caters to standard 3/4" NPT hubs for connection.

INSTALLATION

Installation should only be performed by a competent person using the correct tools. Read all instructions before beginning installation.

1. According to the CEC wiring code, connectors with metric threads are only suitable for Areas Classified in ZONES unless fitted with an approved Metric to NPT thread conversion adaptor.
2. Wiring method for type of cables that can be used in Class I, Div. 1, 2, and Class I, Zone 1, 2, Classified Areas according to 60079-14 installation wiring method restrictions.
3. Shipboard Cables are for use on Marine Platform or shipboards only and are subject to local authorities having jurisdiction on the installation.
4. CAUTION - To reduce the risk of flame propagation, fittings with ISO metric threads require:-
   - 5 full threads engaged for gas groups C and D
   - 10 full threads engaged for gas groups A and B
5. When the connector is supplied with metric entry threads, a CMP Entry Thread Washer should be fitted between the connector and the enclosure to prevent the ingress of moisture or dust into the enclosure. Thread tape must not be applied to the threads.
6. Before installing the connector, ensure that the connector thread forms and the enclosure thread form are compatible.

Specifications

CGB-PXSS2K-NPB-20L-0.5IN Cable Gland
Unit Type: Explosion Proof Cable Gland (Unarmored)
Weight: 0.44 lb
Entry Thread (Hub): 1/2" NPT
Minimum Thread Length: 0.783"
Diameter Over Conductors: 0.496"
Number of Conductors: 15 (Max)
Cable Diameter: 0.390" (Min) to 0.630" (Max)
Nominal Protrusion Length: 2.382"
Operating Temp: -60°C to +100°C
Materials: Nickel Plated Brass, SS, Aluminum, Halogen Free Thermoplastic Elastomer (Seal)

Ratings
Zone 1, 2, 21, 22
ATEX Certifed
IECEx, CSA Approved
INMETRO Approved
GOST R, GOST K Certified
Lloyds, DNV, ABS Approved
Rok, GGTN Permitted
IP66/IP67/IP68
NEMA 4X

MAINTENANCE

There are no serviceable parts inside the fixture. However, it is good practice to routinely clean and check the fixture for proper function.

USE AND CARE

Unauthorized modification may impair the function and/or safety of this device and could affect the life of the equipment. Always check for damaged or worn out parts before using the device. Store it in a secure place out of the reach of children when not in use. Inspect for good working condition prior to storage and before re-use.

REPLACEMENT PARTS

The CGB-PXSS2K-NPB-20L-0.5IN is designed to provide years of reliable performance. Should the need for replacement parts arise, please contact Larson Electronics.

THESE INSTRUCTIONS MAY NOT COVER ALL DETAILS OR VARIATIONS OF THIS PRODUCT FOR YOUR EQUIPMENT OR INSTALLATION REQUIREMENTS. SHOULD FURTHER INFORMATION NOT COVERED BY THESE INSTRUCTIONS BE REQUIRED, PLEASE CONTACT LARSON ELECTRONICS BY EMAIL AT SALES@LARSONELECTRONICS.COM OR BY PHONE AT 1-800-369-6671 FOR FURTHER ASSISTANCE.

PLEASE VISIT LARSONELECTRONICS.COM FOR **WARRANTY** AND **RETURN** INFORMATION.

INSTALLATION INSTRUCTIONS FOR CABLE GLAND

CABLE GLAND COMPONENTS

1. Compound
2. Entry Item
3. Compound Tube
4. Spacer
5. “O” Ring
6. Main Item
7. Skid Washer
8. Outer Seal
9. Outer Seal Nut

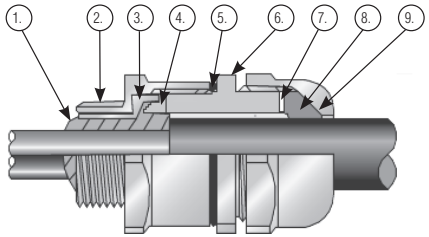

PLEASE READ ALL INSTRUCTIONS CAREFULLY BEFORE BEGINNING THE INSTALLATION

1. Separate the gland components by removing the main item (6) and outer seal nut assembly (7, 8, 9). Slacken the outer seal nut slightly to relax the seal and pass the main item/outer seal nut assembly over the cable, nut end first.

2. Strip the cable sheath by a length to suit the equipment. Position the end of the sheath in line with the main item (6) as shown below and tighten the outer seal nut enough to hold the cable in position.

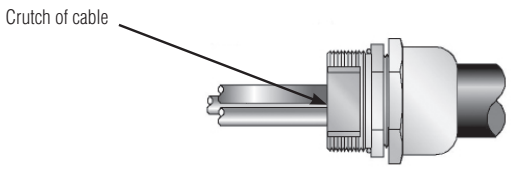

3. Remove any bedding or fillers from around the cable cores. If the cable cores have screens, these should be unravelled and then twisted together to form a single core. Wearing the protective gloves supplied, mix all of the two-part expoxy compound until it is pliable and an even colour is achieved. (Minimum mixing temperature 10°C / 50°F)

4. Fit the tube spacer (4). Seperate the cable cores and apply the compound to the crutch of the cable for a distance of about 6mm and pack into place. If a drain wire is present then it should be sleeved using some heat shrink tubing which is pushed into the compound before shrinking with the application of some heat. If screens have been twisted together at stage 3, then they should be treated like a drain wire.

5. Bring the cores together again and pack more compound around them to a length and diameter sufficient to fill the compound tube, ending in a taper.

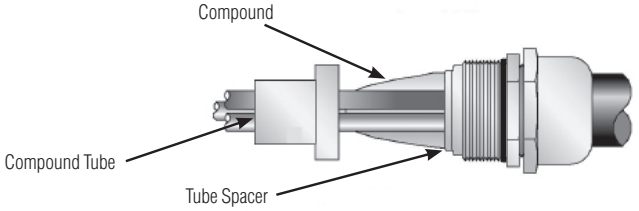

6. Pass the compound tube (3) over the conductors until the stepped end is fully located with the tube spacer (5). Pack more compound into place until the compound tube is fully filled.

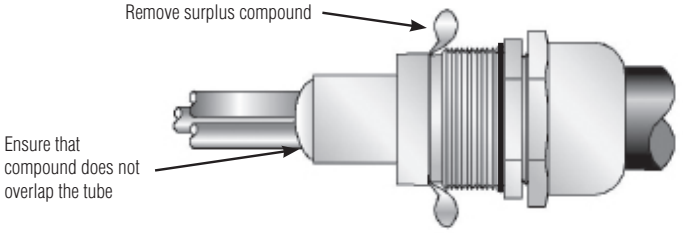

7. Slightly slacken the outer seal nut. Re-install the cable assembly into the entry item making sure the compound is not disturbed and fully tighten the main item (6) onto the entry item (2). Tighten the outer seal nut (9) until it comes to an effective stop.
This will occur when:

A) The outer seal nut (9) has clearly engaged the cable and cannot be further tightened without the use of excessive force by the installer.

B) The outer seal nut (9) is metal to metal with the main item (6).

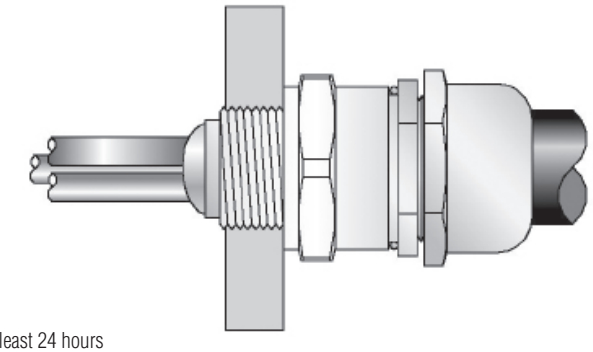

Do not disturb for at least 24 hours