0-10V Dimmable 56 Watt Vapor Proof LED 4 Foot Light for Outdoor Applications 7000 Lumens - IP67 Instruction Manual

Thank you for your purchase of the Larson Electronics GVP-48-2L-LED-D-V2.

WARNING:

READ CAREFULLY BEFORE INSTALLING FIXTURE. RETAIN THESE INSTRUCTIONS FOR FUTURE REFERENCE. CRITICAL SAFETY INSTRUCTIONS:

- INSTALLATION SHOULD ONLY BE CONDUCTED BY A QUALIFIED ELECTRICIAN IN ACCORDANCE WITH NEC AND ANY RELEVANT LOCAL BUILDING CODES.
- RISK OF FIRE OR ELECTRIC SHOCK. FIXTURE INSTALLATION REQUIRES KNOWLEDGE OF FIXTURE'S ELECTRICAL SYSTEMS. IF NOT QUALIFIED, CONTACT A QUALIFIED ELECTRICIAN.
- BE CERTAIN ELECTRICAL POWER IS OFF BEFORE AND DURING INSTALLATION AND MAINTENANCE.
- MAKE SURE THE SUPPLY VOLTAGE IS THE SAME AS THE FIXTURE'S RATED VOLTAGE.
- TO PREVENT WIRING DAMAGE OR ABRASION, DO NOT EXPOSE WIRING TO EDGES OF SHEET METAL OR SHARP OBJECTS. SUITABLE FOR DAMP LOCATIONS.

IMPORTANT

READ CAREFULLY BEFORE INSTALLING THIS FIXTURE. SAVE THESE INSTRUCTIONS FOR FUTURE REFERENCE. THE GVP-48-2L-LED-D-V2 MUST BE WIRED IN ACCORDANCE WITH NATIONAL ELECTRICAL CODE AND ALL APPLICABLE LOCAL CODES. PROPER GROUNDING IS REQUIRED FOR SAFETY.

WE STRONGLY ENCOURAGE ONLY A LICENSED ELECTRICIAN INSTALL, OPERATE AND MAINTAIN THIS PRODUCT. IF YOU ARE NOT QUALIFIED OR UNFAMILIAR WITH ANY ASPECT OF THIS INSTRUCTION SHEET, CONSULT AN ELECTRICIAN. THERE ARE NO SERVICEABLE PARTS INSIDE.

WARNING: MAKE SURE POWER IS TURNED **OFF** BEFORE STARTING THE INSTALLATION OR PERFORMING ANY MAINTENANCE.

RISK OF FIRE/ELECTRIC SHOCK – DISCONNECT POWER AT BREAKER BEFORE INSTALLING OR SERVICING.
RISK OF PERSONAL INJURY – FIXTURE MAY BECOME UNSTABLE OR DAMAGED IF NOT INSTALLED PROPERLY.
RISK OF BURN – ALLOW FIXTURE TO COOL BEFORE SERVICING.

The Larson Electronics GVP-48-2L-LED 0-10V Dimmable LED Light Fixture is similar to our popular explosion proof LED fixtures and provides an LED alternative to fluorescent fixtures that provides longer lamp life and higher performance. These two dimmable LED lamp fixtures produce more output with longer lamp life and are vapor proof and impact/ vibration resistant. This vapor proof LED light is ideal for applications such as ships, offshore applications, marine (saltwater) use, manufacturing, water treatment centers, shopping malls, parking structures, and outdoor flood lighting.

WIRING

Standard pigtail(flying leads) wiring

We strongly encourage a licensed electrician install this product, in all locations especially in outdoor areas where weatherproofing may be required. Universal voltage driver permits operation at 120V - 277V AC, 50 or 60Hz except those factory ordered with low voltage 11V to 25V AC/DC.

Warning: *Check product label for correct input voltage!*

Attach supply line wires to the appropriate light fixture wires as shown in the diagram ➔



Secure each pair of wires according to the diagram. Utilize a junction box or similar device and take precautionary steps for weatherproofing all connections if installed in a location where water may come in contact with the unit. Ensure the unit is properly grounded and that wiring is done according to all local and national electrical/building codes.

Low Voltage DC

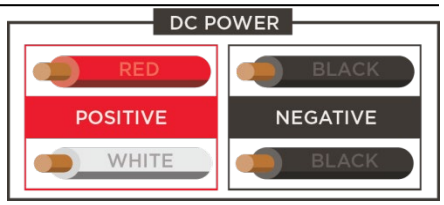

Connect power to power supply outputting low voltage between 11-25 Volts DC. This variable voltage allows greater versatility without affecting light output. Ensure deutsch connectors are properly connected (If applicable)

PREPARATION

- Before beginning assembly, installation, or operation of product, make sure all parts are present. Compare parts with the package contents list and diagram.
- If any part is missing or damaged, do not attempt to assemble, install or operate the product.

TROUBLESHOOTING

PROBLEM	POSSIBLE CAUSE	CORRECTIVE ACTION
Light does not come on	No power to the fixture	Check if circuit breaker is tripped
Wiring to the unit is loose	---	Confirm fixture is properly grounded

QUESTIONS, PROBLEMS, MISSING PARTS

Before returning your fixture, please call Larson Electronics at 1-800-369-6671 or log on to http://www.larsonelectronics.com for replacement parts.

WARNING

- Always hire a licensed electrician for proper installation.
- Always mount this fixture to a grounded junction/breaker box.



LIGHT ASSEMBLY



1. Turn off the power at the main fuse or breaker box.
2. Thread wires through wire gland and back cover wire hole.
3. Connect the wires to the wire terminal L to L, N to N then fasten the wire gland.
4. Connect 0-10V dimmer to associated wires. These are typically purple and grey but may differ per model. Purple is positive (+) and grey is negative (-). Refer to dimmer instructions for connections. ***Please note:*** *Use appropriate dimmer switch that meets area classifications. Do not connect high voltage to dimmer wires!*
5. Attach to the LED tubes to the lamp holder.
6. Put the tube fixing board in the back cover, fixing poles through the board's holes. Then turn around the head of fixing poles 90° to fix the board to back cover.
7. Use the lens and back cover clips to attach lens to back cover.
8. Use the wall fixing clips to fix the light fixture to the wall.
9. Turn on power at main fuse breaker box.

LIGHT ASSEMBLY DIAGRAM

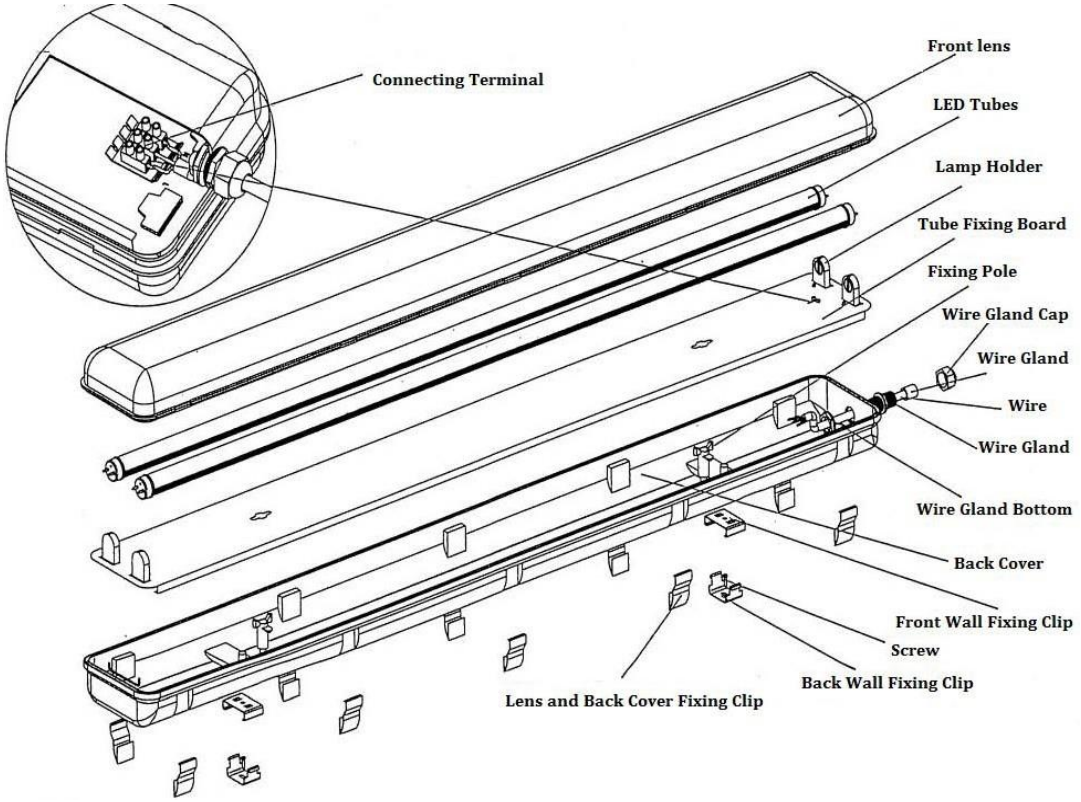

MAINTENANCE

Caution: To avoid personal injury, disconnect power to the light and allow the unit to cool down before performing maintenance.

Warning: No user serviceable parts inside of fixture. Risk of electric shock. Removal of the lens will void the warranty.

1. Perform visual, mechanical and electrical inspections on a regular basis. We recommend routine checks to be made on a yearly basis. Frequency of use and environment should determine this. It is recommended to follow an Electrical Preventive Maintenance Program as described in NFPA 70B: Recommended practice for Electrical Equipment.
2. The lens should be cleaned periodically as needed to ensure continued photometric performance. Clean the lens with a damp, non-abrasive, lint-free cloth. If not sufficient, use mild soap or a liquid cleaner.
3. Inspect the cooling fins on the luminaire to ensure that they are free of any obstructions or contamination (i.e. excessive dust build-up). Clean with a non-abrasive cloth if needed.
4. Do not operate if the lens is cracked or damaged. All fasteners should be properly seated.

USE AND CARE

Unauthorized modification may impair the function and/or safety of this device and could affect the life of the equipment. Always check for damaged or worn out parts before using the device. Store it in a secure place out of the reach of children when not in use. Inspect for good working condition prior to storage and before re-use.

REPLACEMENT PARTS

The GVP-48-2L-LED-D-V2 is designed to provide years of reliable performance. Should the need for replacement parts arise, please contact Larson Electronics.

THESE INSTRUCTIONS MAY NOT COVER ALL DETAILS OR VARIATIONS OF THIS PRODUCT FOR YOUR EQUIPMENT OR INSTALLATION REQUIREMENTS. SHOULD FURTHER INFORMATION NOT COVERED BY THESE INSTRUCTIONS BE REQUIRED, PLEASE CONTACT LARSON ELECTRONICS BY EMAIL AT SALES@LARSONELECTRONICS.COM OR BY PHONE AT 1-800-369-6671 FOR FURTHER ASSISTANCE.

PLEASE VISIT LARSONELECTRONICS.COM FOR **WARRANTY** AND **RETURN** INFORMATION.