EXP-EMG-EXT-42W COMPACT FLUORESCENT EMERGENCY FACTORY SEALED LIGHTING FIXTURES

CAUTION:

Before installing, make sure you are compliant with area classifications, failure to do so may result in bodily injury, death and property damage. Do not attempt installation until you are familiar with the following procedures. All installation must comply with the applicable Electrical Code.

Make sure that the circuit is de-energized before starting installation or maintenance.

Verify that the installation is grounded. Failure to ground will create electrical shock hazards, which can cause serious injury and or death.

Technical information, advice and recommendations contained in these documents is based upon information that Larson Electronics believes to be reliable. All the information and advice contained in these documents is intended for use only by persons having been trained and possessing the requisite skill and know-how and to be used by such persons only at their own discretion and risk. The nature of these instructions is informative only and does not cover all of the details, variations or combinations in which this equipment may be used, its storage, delivery, installation, check out, safe operation and maintenance. Since conditions of use of the product are outside of the care, custody and control of Larson Electronics, the purchaser should determine the suitability of the product for his intended use, and assumes all risk and liability whatsoever in connection therewith.

1. IMPORTANT SAFEGUARDS – READ AND FOLLOW ALL SAFETY INSTRUCTIONS.

NOTE: LAMP MUST BE INSTALLED BEFORE OPERATING
Remove globe assembly, unpack bulb and insert into socket. See installation instruction sections 4 & 5 for removal of globe assembly. **NOTE**: Read this sheet carefully before beginning installation.

- Do not use this equipment for other than the intended use as specified on equipment nameplate.
- **WARNING**: Turn **OFF** the supplying circuit before beginning installation, or performing any maintenance including re-lamping.
- Do not install near gas or electric heaters.
- Do not attempt to service battery. The emergency ballast contains a sealed, no-maintenance battery. Contact manufacturer for information on replacements.
- Batteries must be recycled or disposed of properly.
- Servicing should be performed by qualified service personnel.
- The use of accessory equipment not recommended by the manufacturer can cause an unsafe condition
- Equipment should be mounted in locations and at heights were it will not readily be subjected to tampering by unauthorized personnel.
- The emergency ballast is for use with quad pin compact fluorescent lamps only.

2. INSTALLATION:

Important Note:

1. All installations must comply with the applicable local and/or National Electrical Code.
2. Before installing, check the fixture nameplate to be sure you have the correct fixture.
3. Verify ground continuity in the electrical system.
4. The emergency ballast must be connected to an unswitched power source.
5. Refer to nameplate for specific ambient and supply wire temperature rating.

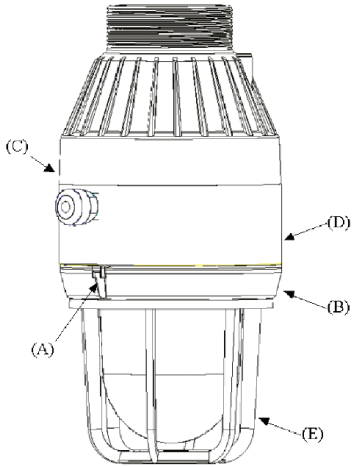

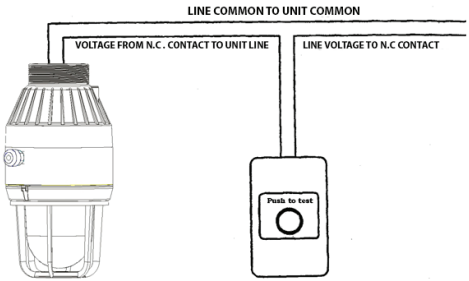

FIG.1

SEE REVERSE FOR TYPICAL TEST INSTALLATION FIG.1 AND FIG.2

Following steps required for installation -

1. Install unit's mounting accessory per instructions supplied with the mount.
2. Install unit's pushbutton test station (purchased separately) per instructions supplied with the station. Station must be wired to fixture mount to provide a method of disconnection the supply source from the unit. An example of how this can be completed is shown in Fig.1 for typical installation.
3. Verify that the supply voltage available is 120V thru 277V.
4. The fixture comes wired for 120V thru 277V operation from the factory. Lamp provided with fixture is to be installed in a non-hazardous environment as follows: (A) Unscrew and remove the globe support assembly (B) from the unit tank (C). Install lamp. Re-attach globe assembly (B) to unit tank (C). Attach fixture to the installed mount. If 277V application is desired refer to step 5.
   CAUTION: During installation or maintenance, care must be taken to avoid scratching, nicking or chipping the glass globe.
5. Make sure the external threads at the top of the unit tank are free of any dirt, metal chips or other foreign materials. Apply a thin coat of lubricant to the threads. **NOTE**: Take extreme care not to cross thread the unit when installing into the mounting accessory. Install the unit by threading into the mounting accessory; the electrical contacts will automatically engage. Be sure the unit is threaded tight. Tighten the set screw on the side of the mounting accessory.
6. Energize unit and verify that proper charging of the fixture is occurring by observing if the red charging indicator lamp inside of globe area is on.
7. Test emergency lamp operation by pressing PUSH-TO-TEST pushbutton of test station and observe that the lamp operates.
8. To install optional guard (E) loosen the four screws on the bottom of the globe support ring, slip the guard over the screws and rotate to the locked position. Tighten the screws firmly.

   NOTE: Emergency ballast must be charged for 36 hrs before running test(s).

TYPICAL TEST INSTALLATION

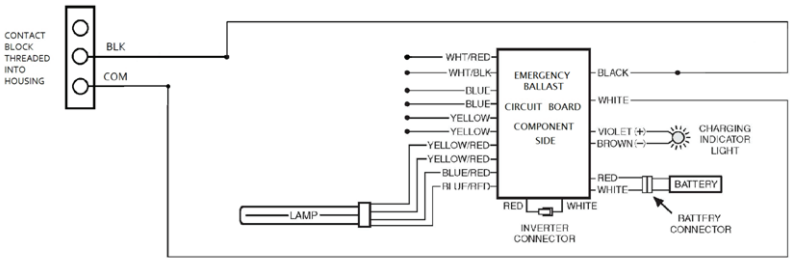

FIG.3

3. MAINTENANCE

As routine maintenance, this emergency fixture should be checked periodically to ensure it is working. The following schedule is recommended.

SEE REVERSE FOR TEST & MAINTENANCE RECORDS CHART

1. Visually inspect the charging indicator light monthly. It must be illuminated.
2. Test operation of the circuit at 30 day intervals for a minimum of 30 seconds. The lamp should operate.
3. Conduct a 90 minute discharge test once a year. The lamp should operate for 90 minutes.

CAUTION: To reduce the risk of electrical shock, disconnect the AC input and inverter before servicing.

LARSON ELECTRONICS LLC • 9419 E US HWY 175 • KEMP, TX 75143
p: 1-800-369-6671 • intl: 903-498-3363 • f: 903-498-3364 • sales@larsonelectronics.com

TEST & MAINTENANCE RECORDS

Unit Location and/or Number _____

DATE	TEST DURATION		MAINTENANCE PERFORMED	COMMENTS
	30 min.	1 ½ hr.		

SAVE ALL INSTRUCTIONS

LARSON ELECTRONICS LLC • 9419 E US HWY 175 • KEMP, TX 75143
p: 1-800-369-6671 • intl: 903-498-3363 • f: 903-498-3364 • sales@larsonelectronics.com