WARNING: TO BE INSTALLED AND/OR USED IN ACCORDANCE WITH APPROPRIATE ELECTRICAL CODES AND REGULATION.
WARNING: USE THIS DEVICE ONLY WITH **STRANDED** COPPER OR COPPER CLAD WIRE. WITH ALUMINUM WIRE USE ONLY DEVICES MARKED CO/ALR OR CU/AL.
TO INSTALL:

NOTE: These devices are Water Tight ONLY when mated with their respective configuration.

1. **WARNING:** TO AVOID FIRE, SHOCK OR DEATH; **UNPLUG CORD OR TURN OFF POWER** AT CIRCUIT BREAKER OR FUSE AND TEST THAT POWER IS OFF BEFORE WIRING!
2. Select round cord size and type **(see Table 1A)**.
3. Remove nut from rubber housing. Separate wiring module from rubber housing by pushing the module from back of housing with a screw driver (or cord).
4. Install closure cover over rubber housing **(for connector only)**.
5. Select proper size of strain relief washer and rubber bushing per your cord size **(see Table 1A)**. The washers and bushings must be broken apart from each other **(See Figs. 2 and 3)**.
6. Insert cord through nut, strain relief washer, rubber bushing and into threaded insert of housing as shown in **Figs. 2 and 3**.
   DO NOT REVERSE ORIENTATION OF STRAIN RELIEF WASHER AND RUBBER BUSHING.
7. Strip cord jacket 0.938" (2.4 cm). Strip insulation to expose 0.562" (1.4 cm) bare copper at the end of each conductor as shown in **Fig. 1** or per strip gage on device.
8. To connect wires: Fully back out terminal screws. Twist all strands of each conductor tightly together (**DO NOT** tin conductors). Insert into proper wire well **(see Table 2A)** and tighten terminal screws firmly to 12-14 in.-lbs. torque. **NOTE:** Terminal screws **MUST** contact on conductor only, **NOT** on insulation. **DO NOT** use solid wire.
9. Reattach the wired device module to the housing by aligning key guide on the module to the key on the housing. Tighten the three (3) assembly screws.
10. Push up rubber bushing and strain relief washer over cord so that the nut can engage the threaded insert. **IMPORTANT:** You must hold the rubber housing firmly when tightening nut.
    NOTE: When Water Tight connector is **NOT** in use, protect it with the provided closure cover.

Cord Sizes and Types with Respect to Strain Relief Washers and Rubber Bushings	
Small	#1: 18/3 AWG - S, ST, SO, SOW; 16/3 AWG - S, ST, SO, SOW; 14/3 AWG - SJ, SJT, SJTO, SJTOW
Medium	#2: 14/3 AWG - S, ST, SO, SOW
Large	#3: 12/3 AWG - SO, SOW 10/3 AWG - SOW

Table 1A

Wire	Terminal Screw	
	125V, 277V & 347	**250V**
Green	Green	Green
White	Silver	Brass/Black
Black	Brass/Black	Brass/Black

Table 2A

Fig. 2 / Fig. 2 / Illustration 2

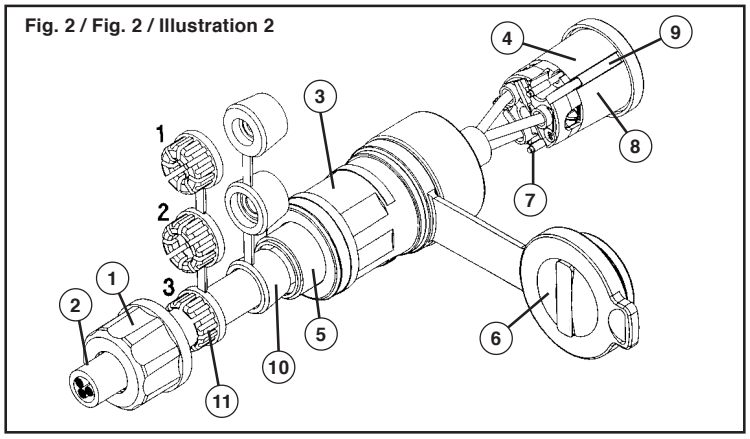

Fig. 3 / Fig. 3 / Illustration 3

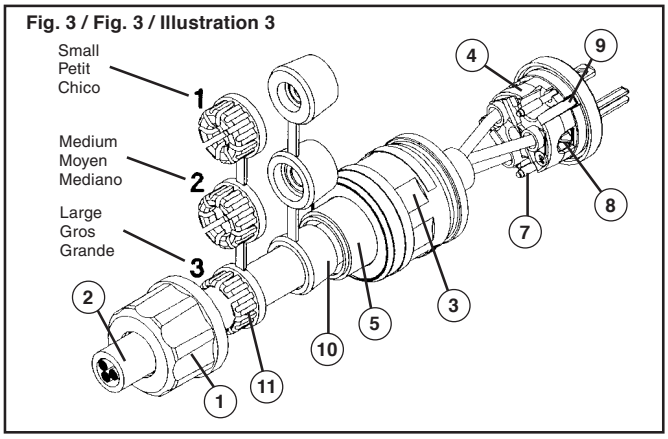

For Figs. 1 and 2:

1 - Nut
2 - Cord
3 - Rubber Housing
4 - Wiring Module
5 - Threaded Insert
6 - Closure Cover (Connector Only)
7 - Assembly Screw (3)
8 - Terminal Screw (3) (Wiring Clamp)
9 - Key Guide on Wiring Module (to be aligned with Key on Housing)
10 - Rubber Bushing (Select as per Strain Relief Washer)
11 - Strain Relief Washer, as per Table 1A

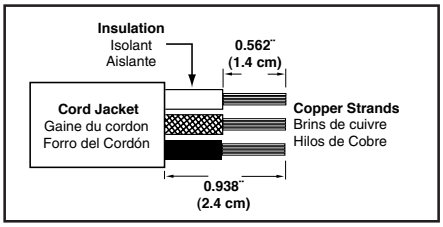

Fig. 1 / Fig. 1 / Illustration 1