14W Vapor Proof LED 2' Light - Motion + Day/Night Sensor - 1750 Lumens - IP67 - Outdoor Approved Instruction Manual

Do not attempt operation until you are familiar with all warnings, precautions, and procedures outlined within this instruction sheet. Read carefully before operating. Retain these instructions for future reference.

CAUTION

- Risk of fire/electrical shock. If not qualified, consult an electrician.
- Disconnect power at fuse or circuit breaker before installing or servicing.
- Edges may cut. Handle with care.

SAFETY INSTRUCTIONS (Read Carefully for your Protection)

- ETL Approved for Wet Locations.
- Connect fixture to voltage on nameplate. Voltage 120V, 220-240V, 12V, or 24V depending on model purchased. Check product label for correct voltage.
- A qualified electrician or person with experience in household wiring should install this fixture. The electrical system and the method of connecting to electricity must be in accordance with the National Electrical Code and local building codes.
- Keep away from flammable objects. Do not position fixture within one inch of any combustible materials.
- Your light fixture is prewired for easy installation.
- This fixture is rated for 50,000+ hours.
- Wear rubber sole shoes and work on a sturdy wooden ladder.
- To avoid hazard to children, account for all parts and destroy packing materials.

PREPARATION

- Before beginning assembly, installation, or operation of product, make sure all parts are present. Compare parts with the package contents list and diagram.
- If any part is missing or damaged, do not attempt to assemble, install or operate the product.

TROUBLESHOOTING

PROBLEM	POSSIBLE CAUSE	CORRECTIVE ACTION
Light does not come on	No power to the fixture	Check if circuit breaker is tripped
Wiring to the unit is loose	---	Confirm fixture is properly grounded

QUESTIONS, PROBLEMS, MISSING PARTS

Before returning your fixture, please call Larson Electronics at 1-800-369-6671 or log on to http://www.larsonelectronics.com for replacement parts.

WARNING

- Always hire a licensed electrician for proper installation.
- Always mount this fixture to a grounded junction/breaker box.



LIGHT ASSEMBLY

1. Turn off the power at the main fuse or breaker box.
2. Thread wires through wire gland and back cover wire hole.
3. Connect the wires to the wire terminal L to L, N to N then fasten the wire gland.
4. Attach to the LED tubes to the lamp holder.
5. Put the tube fixing board in the back cover, fixing poles through the board's holes. Then turn around the head of fixing poles 90° to fix the board to back cover.
6. Use the lens and back cover clips to attach lens to back cover.
7. Use the wall fixing clips to fix the light fixture to the wall.
8. Turn on power at main fuse breaker box.

LIGHT ASSEMBLY DIAGRAM

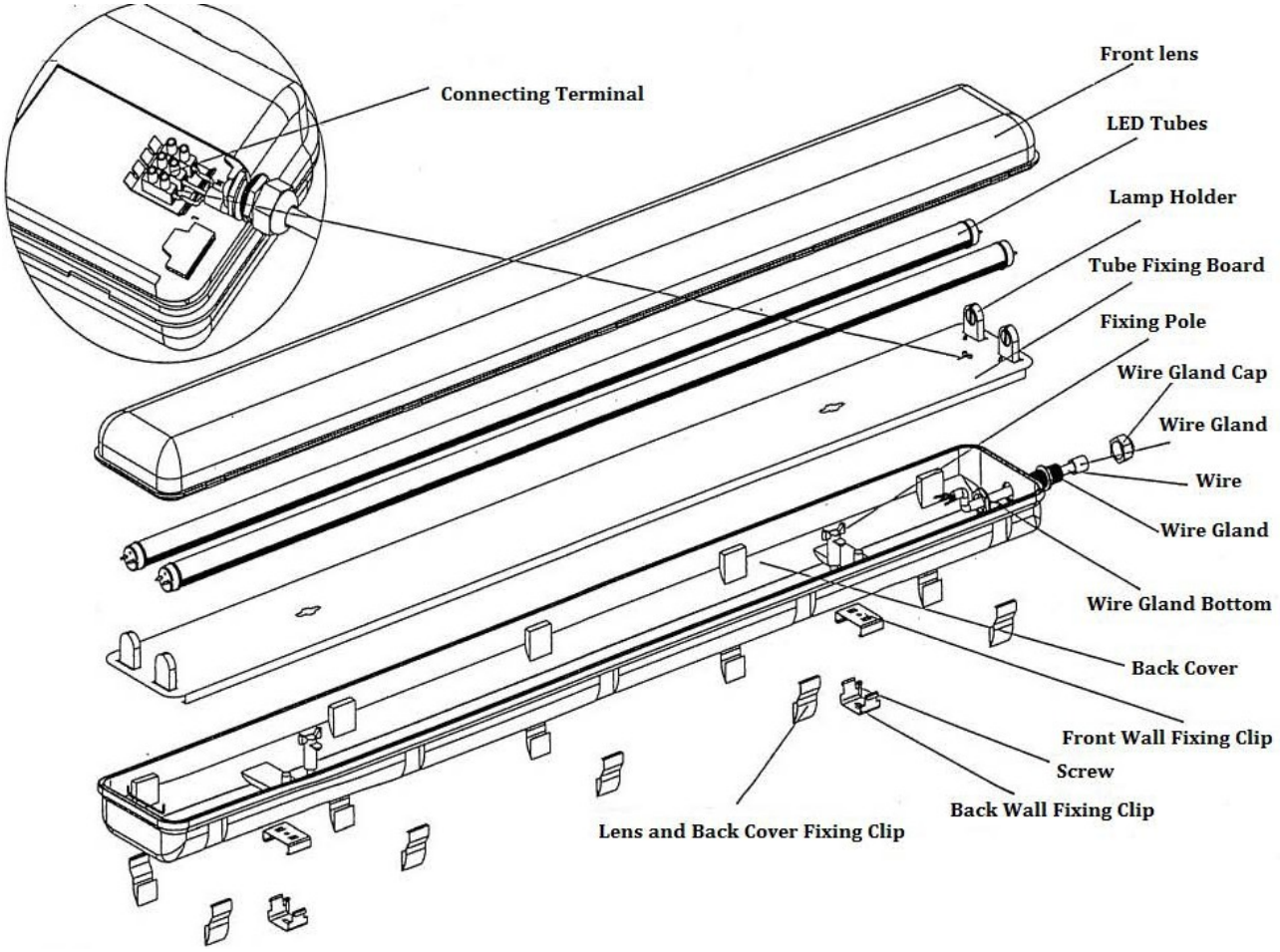

DAY/NIGHT SENSOR

The sensor can be configured to work for the environment installed. Features such as Sensitivity, Time on, and LUX can be configured. ***De-energize fixture prior to making adjustments in order for them to take effect!***

DIP SWITCHES

IMPORTANT: persons or objects moving towards the sensor are detected best.

NOTE: The high frequency of the output of this sensor is <10Mw – that is just one 100th of the transmission power of a mobile phone or the output of a microwave oven.

SENSITIVITY

ON	1	2	DISTANCE
	—	—	2m (6.5ft)
	—	ON	5m (16ft)
	ON	—	8m (26ft)
	ON	ON	10m (32ft)

Detection Area

Detection area can be reduced by selecting the combination on the DIP switches to fit precisely each application.

TIME

ON	3	4	5	AMOUNT
	—	—	—	10 SEC
	—	—	ON	1 MIN
	—	ON	—	5 MIN
	—	ON	ON	10 MIN
	ON	—	—	15 MIN
	ON	—	ON	20 MIN
	ON	ON	—	25 MIN
	ON	ON	ON	30 MIN

Hold Time

Refers to the time period the lamp remains illuminated after no motion is detected.

LUX

ON	6	7	8	AMOUNT
	—	—	—	24 HR
	—	—	ON	10 LUX
	—	ON	—	20 LUX
	—	ON	ON	50 LUX
	ON	—	—	100 LUX
	ON	—	ON	200 LUX
	ON	ON	—	300 LUX
	ON	ON	ON	500 LUX

ON - INDICATES DIP SWITCH ON

— - INDICATES DIP SWITCH OFF

Daylight Sensor

The sensor can be set to only allow the lamp to illuminate below a defined ambient brightness threshold. When set to Disable mode, the daylight sensor will switch on the lamp when motion is detected regardless of ambient light level. 30lux, 50lux, 100lux,: twilight operation, 5lux, 15lux: darkness operation only.

THESE INSTRUCTIONS MAY NOT COVER ALL DETAILS OR VARIATIONS OF THIS PRODUCT FOR YOUR EQUIPMENT OR INSTALLATION REQUIREMENTS. SHOULD FURTHER INFORMATION NOT COVERED BY THESE INSTRUCTIONS BE REQUIRED, PLEASE CONTACT LARSON ELECTRONICS BY EMAIL AT SALES@LARSONELECTRONICS.COM OR BY PHONE AT 1-800-369-6671 FOR FURTHER ASSISTANCE.

PLEASE VISIT LARSONELECTRONICS.COM FOR **WARRANTY** AND **RETURN** INFORMATION.