Industrial Explosion Proof Telephone - Class I/II/III, Div 1 - VoIP - PoE Compatible - NEMA 4X Instruction Manual

General Information

the EPPH-230A-VOIP Telephones are constructed of cast aluminum and are weatherproof and corrosion resistant. User operation is identical to that of a standard analog telephone—simply lift the handset and dial the desired telephone number.

These VoIP Telephones are designed for connection to a 10/100 BaseT Ethernet, and operate from either Power-over-Ethernet or an external power source. The VoIP Telephones provide point-to-point communications between personnel throughout a facility over an existing LAN.

In addition to providing standard telephone operation, the VoIP telephones feature real-time alarm reporting enabling system supervisors to monitor the telephones' activity and address caller needs or maintenance issues immediately. Also, four user-configurable inputs and two outputs have been provided for peripheral control.

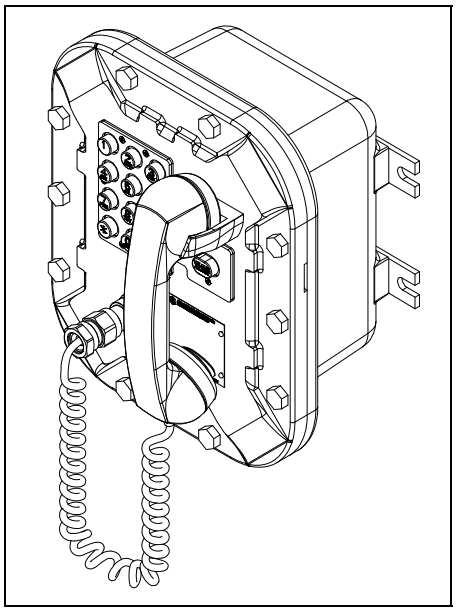

System Requirements and Limitations

VoIP Telephones require Power-over-Ethernet or a local 24–48 V dc power source for operation. Two VoIP telephones can be connected in a peer-to-peer configuration without the need for a LAN, however, a 10/100 BaseT Ethernet with SIP server is required for systems containing three or more VoIP Telephones. Conferences are limited by the customer's LAN media capabilities and the services available at each end point.

Tips for VoIP Subscribers

If you have or are thinking of subscribing to an interconnected VoIP service, you should:

- Provide your accurate physical address to your interconnected VoIP service provider to ensure that emergency services can quickly be dispatched to your location.
- Be familiar with your VoIP service provider's procedures for updating your address, and promptly update address information in the event of a change.
- If your power is out or your internet connection is down, be aware that your VoIP service may not work. Consider installing a backup power supply, maintaining a traditional telephone line, or having a wireless telephone as a backup.
- If you have questions about VoIP in general, see http://www.fcc.gov/cgb/consumerfacts/voip.html.

Features and Functions

VoIP telephones include the following features:

- SIP compatible (RFC3261)
- Real-time alarm reporting via email or Syslog
- Power-over-Ethernet compatible (Power Mode A, Class 0)
- Configurable via web page, serial link or download
- Four configurable auxiliary inputs and two configurable voltage-free contact outputs

Installation

Installation Guidelines

These enclosures must be installed by trained, qualified and competent personnel. Installation must comply with state and national regulations, as well as safety practices for this type of equipment.

⚠ CAUTION ⚠ Do not install this equipment in hazardous areas other than those indicated on the approval listing in the "Specifications" section of this manual. Such installation may cause a safety hazard and consequent injury or property damage.

The mounting location must be flat and provide proper clearance, rigidity and strength to support the enclosure and all contained devices.

⚠ **WARNING** ⚠ Securely fasten the enclosure to the mounting location, using 3/8-inch diameter steel mounting bolts and washers, or washer head bolts.

⚠ **WARNING** ⚠ **Do not disconnect equipment while energized. Insure proper grounding to protective earthing.**

⚠ **WARNING** ⚠ **The front cover is not hinged to the rear enclosure. When the cover bolts are removed, the cover must be adequately supported.**

⚠ **ATTENTION** ⚠ **Installation should be performed by qualified personnel and only in accordance with the National Electrical Code or applicable local codes.**

Inspect and clean the machined flange flame joint surfaces of both the cover and box. Surfaces must be smooth, free of nicks, scratches, dirt or any foreign particle build-up that would prevent a proper seal. Surfaces must seat fully against each other to provide a proper explosion-proof joint. Clean surfaces by wiping with a clean lint-free cloth.

Apply a light coat of anti-seize gel lubricant to flange surfaces and close the cover. Install and tighten all cover bolts to 30 ft-lbs. Make certain no cover bolts are omitted. Use only those bolts supplied with the enclosure.

When installing any telephone equipment, please adhere to the following guidelines to ensure the safety of all personnel:

- **Electrostatic Discharge (ESD) Protection:** Your telephone has an earth ground terminal provision. Ensure that it is connected to ground in accordance with all local safety regulations and the National Electrical Code (NEC). Grounding must be ensured for safe and stable communications. Do not use long and coiled ground wires. Trim ground wires to the required length. Please note proper grounding does not eliminate the need for lightning protection for the telephone or the telephone system.
- NEVER install the telephone during a lightning storm.
- **Install a Cat5 data line lightning surge protector** on any phone installed where the phone or phone cable is at risk of being exposed to lightning strikes. The lightning arrestor must be installed as close to the phone as possible in a non-hazardous environment. The lightning arrestor must not be installed within the telephone enclosure.
- USE CAUTION when installing or modifying Cat5 data lines.

Mounting

NOTE: The mounting surface must be able to support the weight of the telephone, which is 28 lbs.

The enclosure must be securely fastened with 3/8-inch diameter steel mounting bolts located on all four mounting feet. Stainless steel hardware is recommended in outdoor applications. Refer to Figure 2. The suggested mounting height is 48 inches to the bottom of the enclosure.

NOTE: Refer to the Installation, Operation, and Maintenance Data Sheet enclosed with the unit for additional enclosure information.

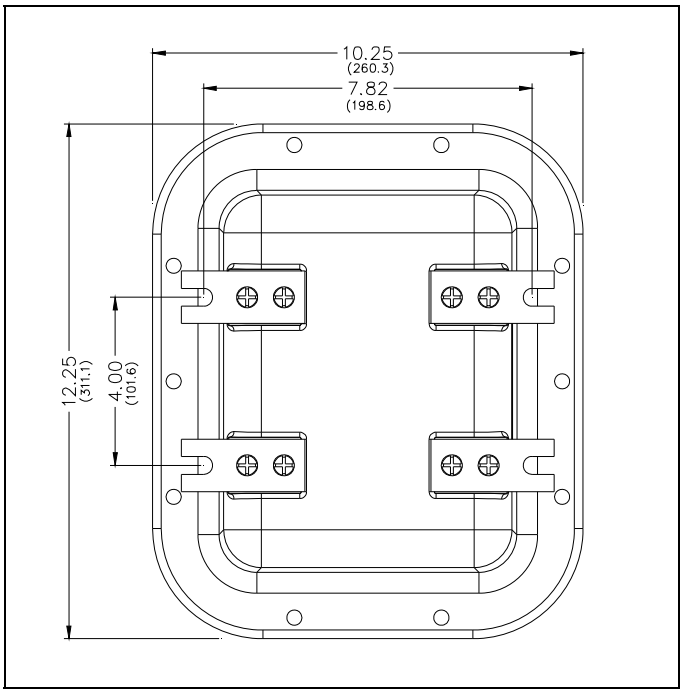

Cable Entries

Refer to Figure 3 for the NPT conduit entries. Ensure any unused openings are sealed with proper fittings per local standards. Use field wiring suitable for the ambient temperature. Any conduit NPT plugs (blanking elements) must be explosion-proof with a Type 4X rating.

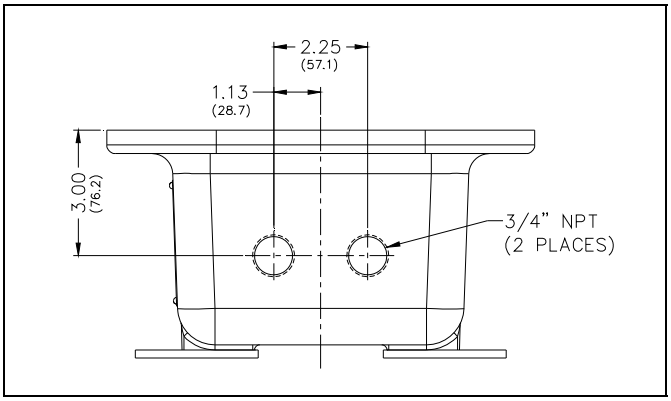

Hardware Description

External

EPPH-230A-VOIPcontains a handset with an approved cable gland, standard keypad, volume control button, and applicable approval labeling. The handset rests on a cradle, which has a magnetic reed switch to signal an off-hook condition. The enclosure is sealed with ten cover mounting bolts located around the perimeter of the enclosure's flange. See Figure 4.

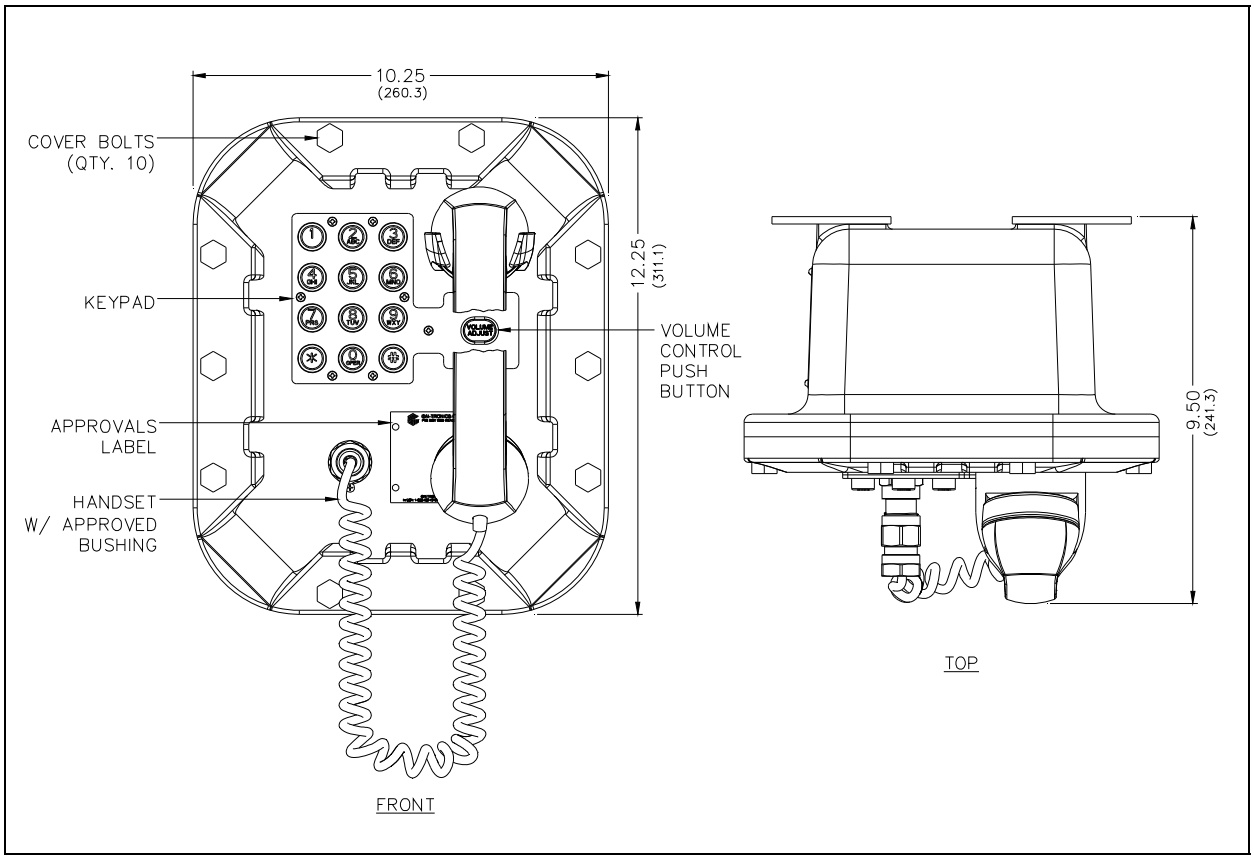

For the EPPH-230A-VOIP Telephone with the headset option, the cradle and handset are replaced with a removable headset and headset activation bracket.

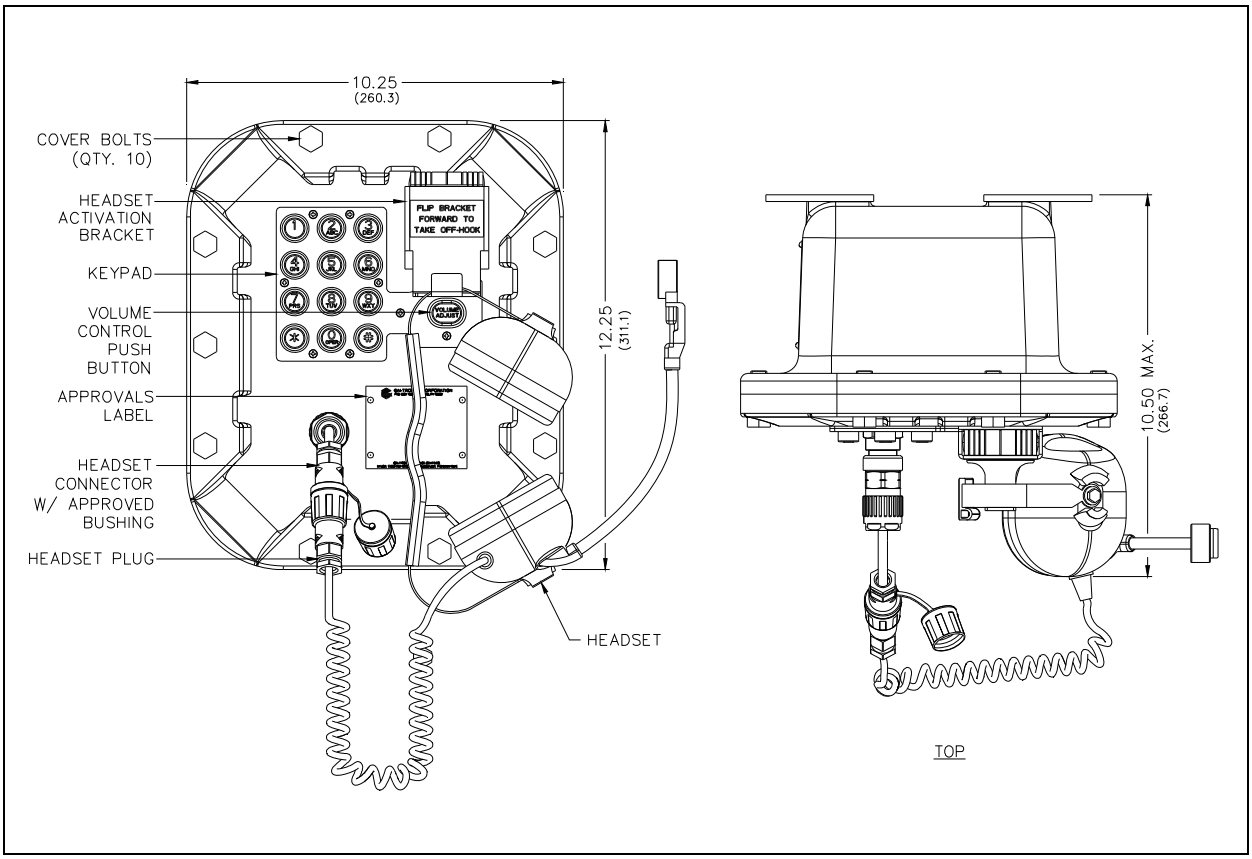

Internal

All standard components are mounted to the rear of the front cover. See Figure below for the parts layout.

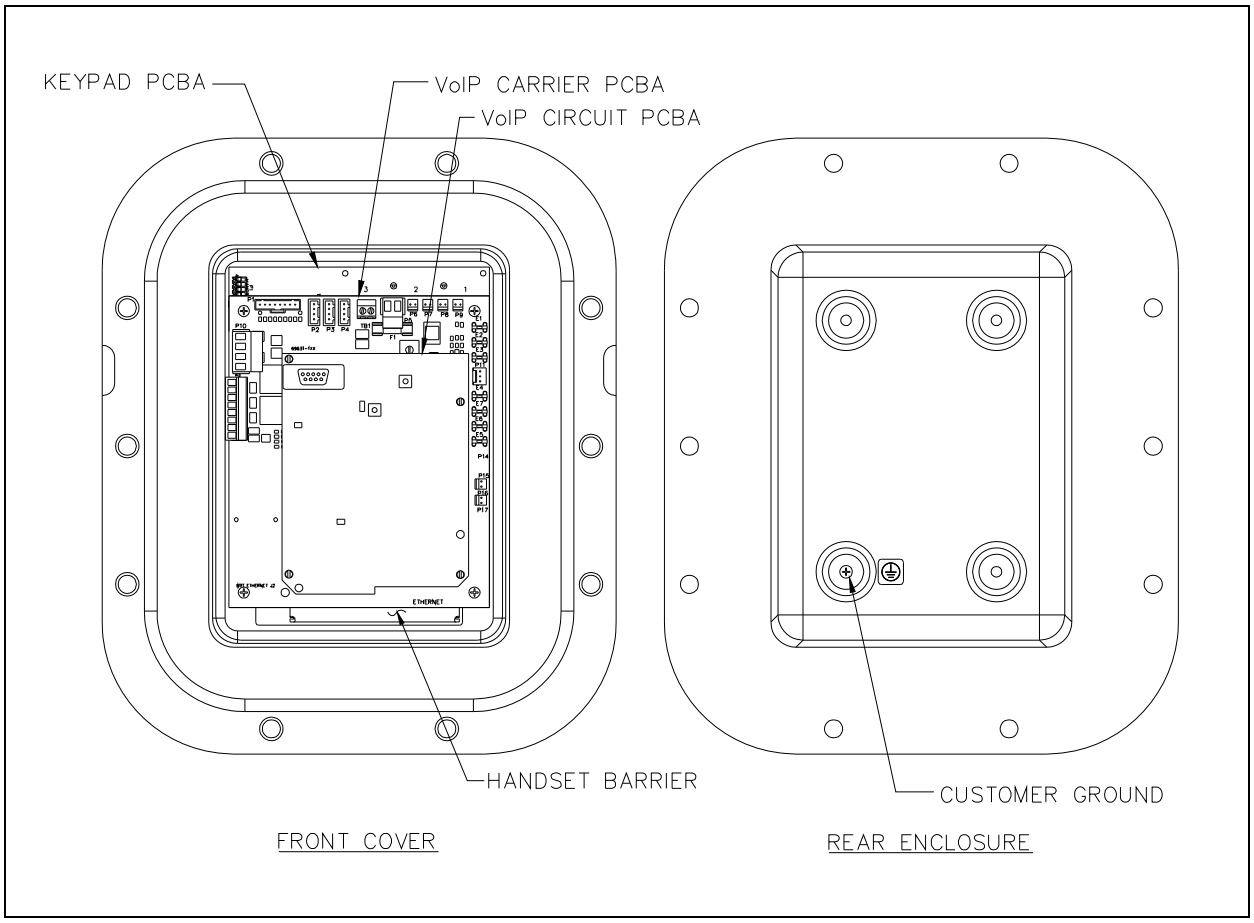

Wiring

⚠**WARNING**⚠ The front cover is not hinged to the rear enclosure. When the cover bolts are removed, the cover must be adequately supported.

1. While supporting the front cover, remove the ten cover bolts on the enclosure flange. Pull the front cover far enough away to expose the internal connections. Place the front cover aside.

2. Plug the incoming Cat5 data line to the network Cat5 cable receptacle on the underside of the VoIP PCBA. See Figure below.

Install any additional connections as indicated below. Refer to Figure on page 8 and 9 for wiring details. Refer to Table 3 on page 11 for the recommended conductor sizes.

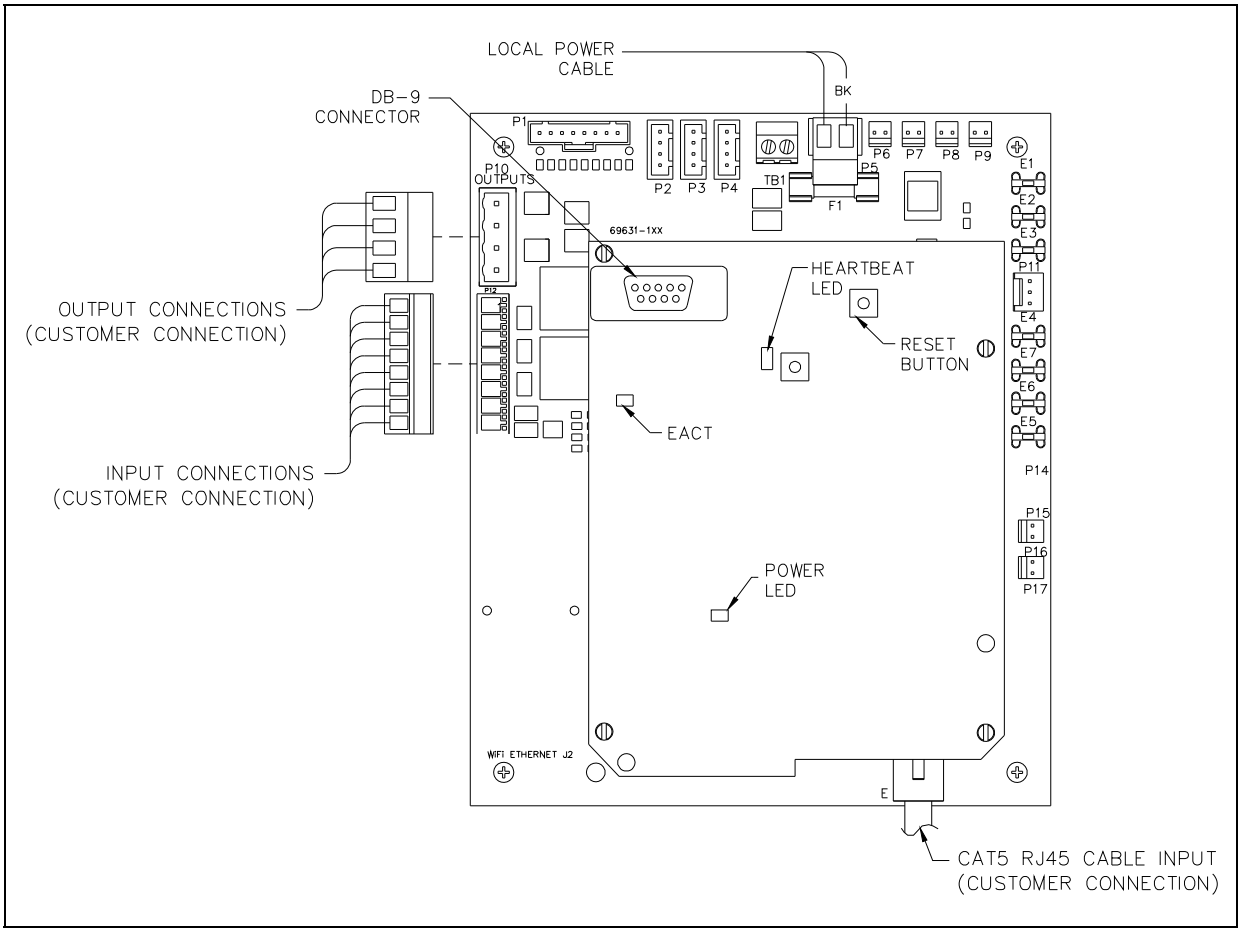

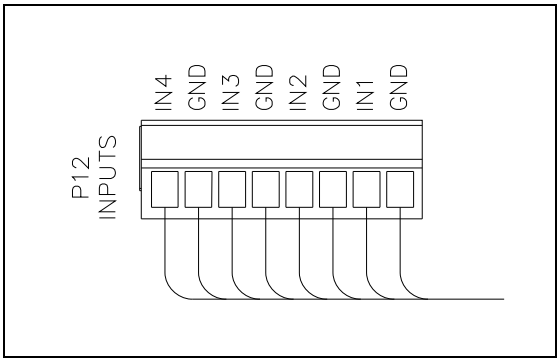

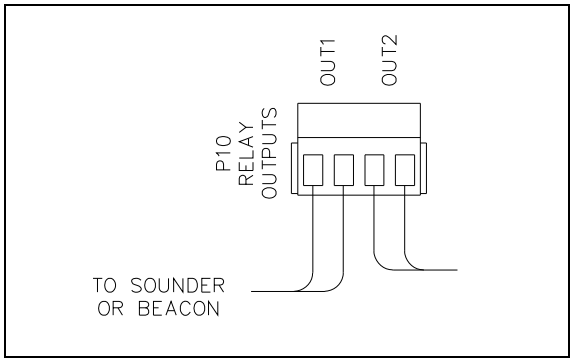

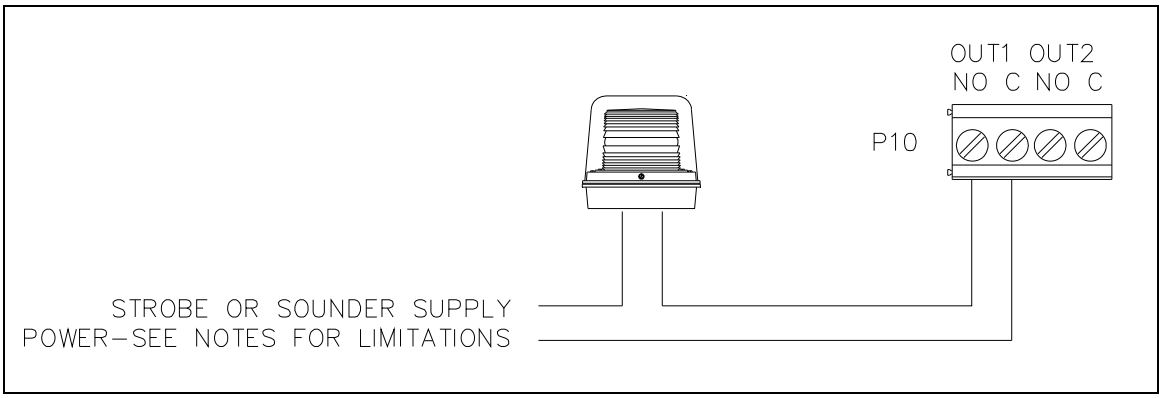

Power

Power-Over-Ethernet (POE)

Connect power to the system as indicated in your POE equipment manual. (Power Mode A, Class 0)

Local Power

When POE is not available, this telephone can operate from a local 24–48 V dc power source. A removable terminal block, P5, has been provided for connection of local power to the telephone. Connect the positive conductor to the (+) terminal and the negative conductor to the (−) terminal of P5. Connection is polarity sensitive.

Network Cable

Connect a Cat5 or Cat5e UTP cable with an RJ45 connector between the Local Area Network (LAN) and the VoIP PCBA.

I/O

Inputs

Four auxiliary inputs have been provided for customer use. Terminations for these inputs are provided on terminal block P12. Connect each input between the desired input (INPUT 1–4) and common (COM) on terminal block P12. Refer to the “Inputs” on page 10 for programming instructions of these inputs.

Inputs

The four auxiliary inputs are activated by connecting the relevant input terminal to a common terminal via a volt-free contact. See the appropriate installation guide for connection details and electrical specifications. If the contact is open, the input is normally deemed to be ON, and if the contact is closed it is deemed to be OFF. The sense can be inverted, see below:

Input Contact Open/Close Sense Configuration

External Contact	Sense Normal	Sense Invert
Open	ON	OFF
Closed	OFF	ON

The auxiliary inputs can be configured to report their status to a remote site using two methods:

- Syslog output over TCP
- SMTP mail message

For each input, the following parameters can be set:

Input Contact Configuration

Parameter	Function
DETECT	Specifies whether an input will report being set to its ON condition only (ON), its OFF condition only (OFF), on either event (ON+OFF), or not at all (NONE). The ON and OFF states are affected by the SENSE setting below.
SENSE	If set to NORMAL, a contact closure will report as OFF. If set to INVERT, a contact closure will report as ON. Default value: **NORMAL**
SYSLOG	Enables or disables SYSLOG reporting for the selected input. Syslog settings are on the IP Setting page. Contact Larson Electronics for further information on syslog reporting, if required.
MAIL	Enables or disables SMTP reporting for the selected input. SMTP settings are on the Email Settings page. Contact Larson Electronics for further information if required.
MSG	Replaces the default text message Aux_in <input_number> with the text entered (maximum 40 characters). The status <on/off> is appended to the end of the text. If the MSG value is blank, the default message is reinstated. The message sent (for both mail and syslog reports), takes the form: HOSTNAME COUNT TIME MSG ON/OFF Where: HOSTNAME is from the Unit Settings page COUNT is a volatile event counter (rolls over at 10000) TIME is the event time and date from the unit's clock MSG is the message set by the MSG field above. If no message has been set, the default is "Aux_in x". ON/OFF is either the word ON or OFF according to the state of the input, taking account of the SENSE setting.

Table 1. Auxiliary Inputs

Pin	Label	Function
1	IN4	Input 4
2	COM	Common
3	IN3	Input 3
4	COM	Common
5	IN2	Input 2
6	COM	Common
7	IN1	Input 1
8	COM	Common

Outputs

Two outputs have been provided for customer use. Terminations for these outputs are provided on connector P10.

Each VoIP Telephone contains two voltage-free output contacts. Refer to the "Specifications" section of this manual for the output ratings. Both outputs are single-pole, single-throw contacts.

The function of each output is configurable. Outputs can be configured for one of the following modes: On, Off, Pulse, Mute, Ring, Call, Connect, Hook, In Use, Ring Cadence, Ring Out, Page, Registered, or Emergency. In some modes, the duration of the activation or on/off times can also be set. Contact Larson Electronicsfor more details.

An external beacon or sounder can be activated with output 1 on the VoIP PCBA. The output must be configured to "Ring" mode to activate the external device.

Table 2. Output Contacts – P10

Pin	Label	Description
1	C1	Common Output 1
2	NO1	Normally Open Output 1
3	C2	Common Output 2
4	NO2	Normally Open Output 2

Table 3. Recommended Cabling

Cable Use	Size
LAN	Cat5 or Cat5e UTP cable with an RJ45 connector
Power	Two-conductor, No. 22 AWG is typical
Inputs	Two-conductor, No. 22 AWG is typical
Output contacts	Two or three-conductor, No. 18 AWG is typical
Speaker	Two or three-conductor, No. 18 AWG is typical

Status Indication

Power

The Power LED located on the VoIP PCBA illuminates when power is applied to the telephone.

Heartbeat

The Heartbeat LED located on the VoIP PCBA will flash once communication over the LAN is established.

EACT

The EACT LED located on the VoIP PCBA will turn on when the VoIP PCBA is connected to an Ethernet device and flash when data is being transmitted.

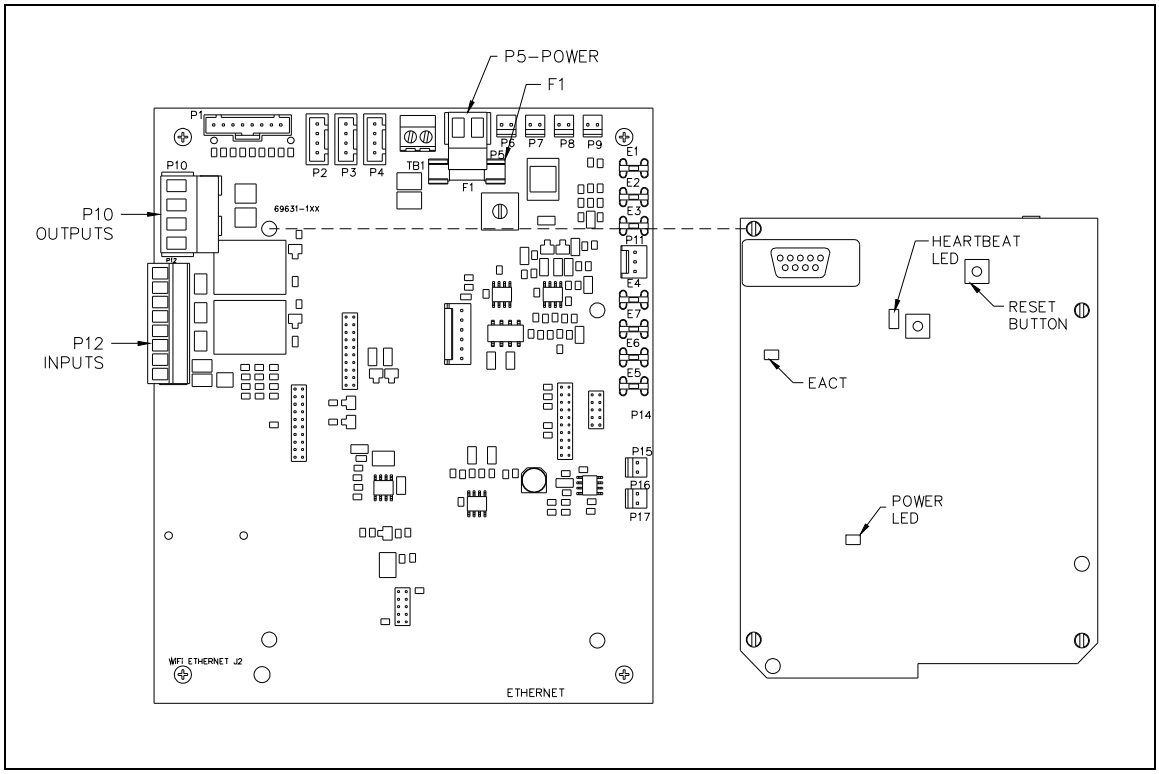

Attach the Front Cover

After all adjustments have been completed, inspect and clean the machined flange joint surfaces of both the cover and box. Surfaces must be smooth, free of nicks, scratches dirt or any foreign particle build-up that would prevent a proper seal. Surfaces must seat fully against each other to provide a proper explosion-proof joint. Clean surfaces by wiping with a clean lint-free cloth.

Apply a light coat of anti-seize gel lubricant to flange surfaces and close the cover. Install and tighten all cover bolts to 30 ft-lbs. Make certain no cover bolts are omitted. Use only those bolts supplied with the enclosure.

NOTE: Refer to the Installation, Operation, and Maintenance Data Sheet enclosed with the unit for additional information.

External Controls

Handset Receiver Volume Control

A push-button switch has been provided on the front cover of the telephone for adjustment of the handset receiver volume. The receiver volume adjustment operates as follows:

- The initial direction of the volume (increase or decrease) is determined by prior activity. The initial direction will be opposite of the previous activity.
- Changing the direction is accomplished by allowing a period of inactivity (greater than 1 second).

Example – Increasing Volume: Depress the volume switch. If the receiver volume begins to decrease, wait at least 1 second and depress the volume switch again. The volume will begin to increase. When the desired volume is achieved, do not depress the switch.

Maximum (Handset Receiver) Level Remote Control

The receiver volume level can be controlled remotely by changing the setting in the configuration file.

NOTE: The handset receiver volume setting using PB1 should be set for the maximum volume (factory default) prior to adjusting the volume remotely.

Programming

Contact Larson Electronics for further detailed programming and configuration instructions.

Quick Start Guide

For easier set up, configure the software prior to installing the telephone in a hazardous environment. The general sequence for set up and use is as follows:

Stage of Process	Comments
1. Initial network configuration	**Essential**: The telephone must be set up for the network prior to installation.
2. Assign a host name	**Recommended**: The host name provides identification of the different VoIP telephones on the network.
3. Change user name and password	**Recommended**: This security measure helps to prevent unauthorized changes to the telephone's configuration.
4. Mounting	Physically mount the telephone at the intended location.
5. Installation	Provide telephone connections and cabling to the network at the intended location.
6. Final configuration (can also be done prior to installation)	Set the autodial numbers, etc. Configuration changes can be performed remotely, if desired.
7. Test	Verify that calls can be made successfully.
8. Maintain	Monitor alarms. Set up auto-updates.

Verify the PC is connected to the same network as the VoIP telephone.

The easiest way to get started is to make a network connection to the unit and log on via a web browser. The unit is initially set with a static IP address:

IP address 192.168.1.2

A user name and password will be requested. The initial factory settings are:

User Name **user**

Password **password**

The telephone's home page allows access to all the other configuration pages. Use the Network page to change IP settings appropriate for the intended network.

⚠ **ATTENTION** ⚠ Be sure to assign a unique host name (located on the UNIT settings page) for each telephone on the network. The factory default host name in each unit is its serial number prefixed by "GT".

Alternative Configuration Methods

There are three methods for configuring Handset VoIP telephones:

- Web pages
- Configuration file
- Command Line interface (CLI)

Web pages (held within the telephone) can be accessed over the network using a browser such as Internet Explorer™, to view and change settings within a single unit.

Configuration files are ASCII text files containing configuration options that can be read and edited by VCONF (a dedicated software configuration tool), or directly by a knowledgeable user. The telephone can automatically download a configuration file from the network, providing a controlled method of configuring multiple telephones.

The telephone can also be configured using a command line interface, either via the local serial port or remotely via a TELNET session over the network.

Operation

EPPH-230A-VOIP Handset Operation

1. Lift the handset to place a call.
2. The handset receiver volume control located on the front cover keypad, can be adjusted to the desired level by pressing the volume control push button.
3. Dial the desired number.
4. After completion of the call, place the handset on-hook.

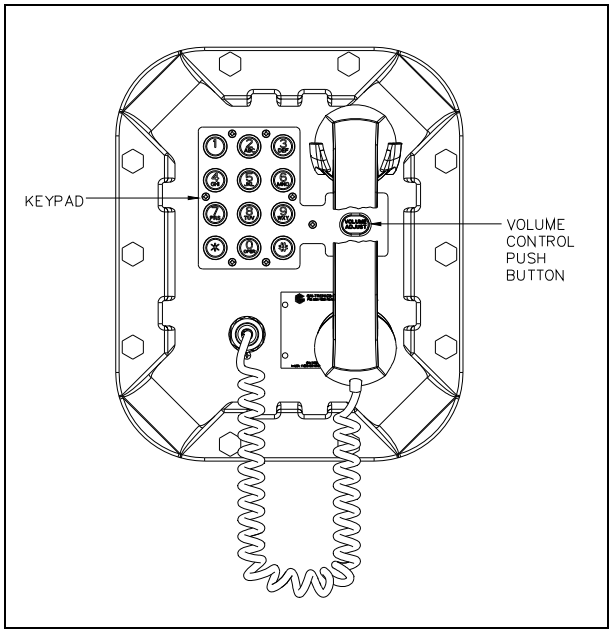

EPPH-230A-VOIP Headset Operation

1. To connect the headset, plug it into the flexible plug on the front of the telephone by removing the sealing cap from the receptacle, aligning the connector pins, and screwing the two ends together. See Figure belwo.

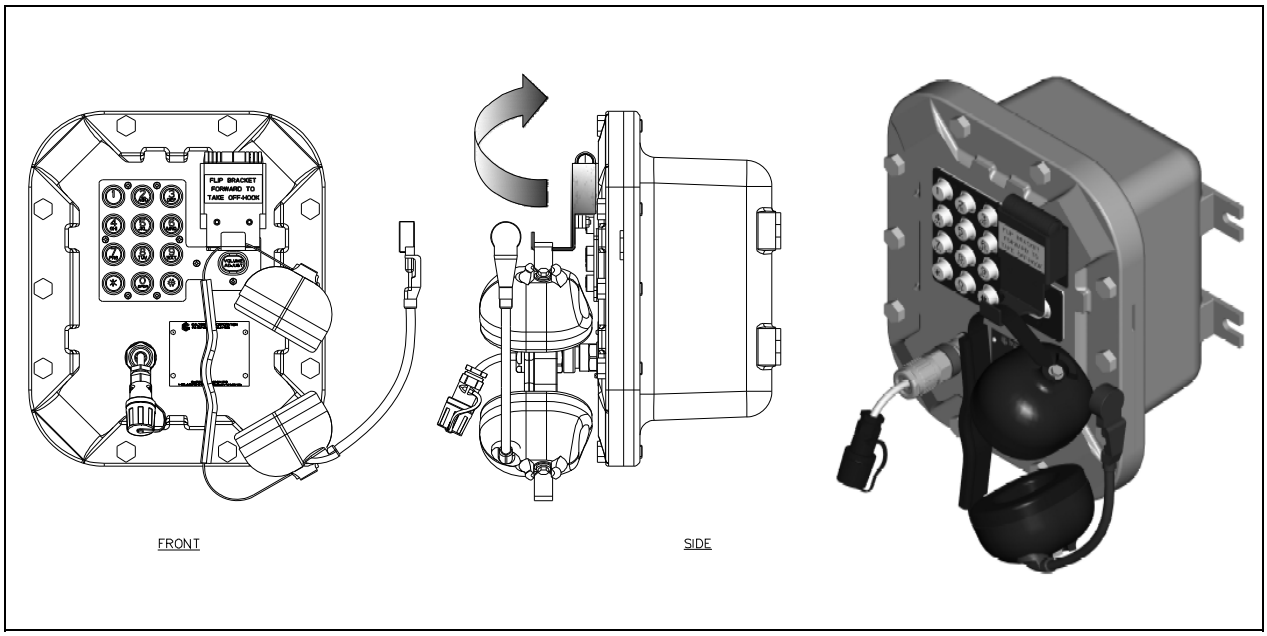

2. To place a call, remove the headset from the headset activation bracket and flip the headset bracket forward to its preset position.

3. The handset receiver volume control, which is located on the front cover keypad, can be adjusted to the desired level by pressing the volume control push button.

   NOTE: Pressing the volume control push button increases the volume in 3-dB increments. The volume starts at 0 db and increases to a maximum volume of 18 dB. Pressing the volume control push button a seventh time will return the volume to 0 dB.

4. Dial the desired number.

5. Flip the headset activation bracket to its vertical preset position to hang up. If applicable, place the headset on the bracket after the completion of the call. Otherwise, disconnect the flexible receptacle and plug by unscrewing the two ends, and pulling them apart. When disconnected, reattach the sealing cap to the end of the receptacle.

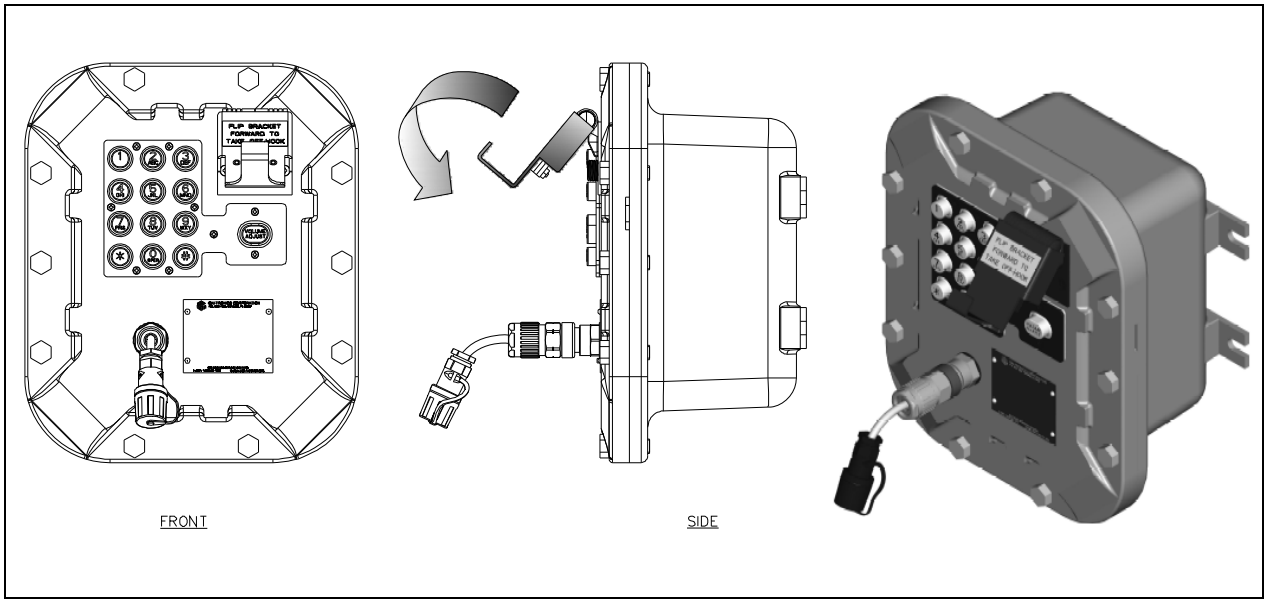

Maintenance

Service

If your telephone requires depot service, contact Larson Electronics. If the equipment is under warranty, repairs will be made without charge. Please include a written explanation of all defects to assist our technicians in their troubleshooting efforts.

Call Larson Electronics at 1-877-882-3903

Troubleshooting

Table 4. Troubleshooting Chart

Problem	Possible Solution
Low volume in handset or headset	Increase the volume setting using the Volume Adjust button on the front panel. **NOTE:** There is no external speaker adjustment.
High volume in handset or headset	Decrease the volume setting using the Volume Adjust button on the front panel. **NOTE:** There is no external speaker adjustment.
Front panel push buttons are not operational	Verify the push buttons are properly configured.
Inputs not operational	Check the input connections. Verify the inputs are properly configured.
Outputs not operational	Check the output connections. Verify the outputs are properly configured.
Cannot make or receive calls	Check the connection of the LAN cable. Verify that power is applied to the unit. Verify the LAN parameters have been configured properly. Verify the telephone has been set up on the network.
No power indication	Check the power connections. If using POE, check the operation of the POE equipment.

Specifications

Power ..... Power-over-Ethernet, 802.3af compliant (via RJ45) Power Mode A, Class 0, or
External power supply: 24–48 V dc, 200 mA
A separate, isolated supply must be provided for each telephone.

Network ..... 10/100 BaseT Ethernet RJ45, Cat5 or Cat5e UTP
Static IP provisioning or DHCP STUN client (NAT traversal)

Call control signaling ..... SIP (RFC3261 compliant) Loose routing

Inputs

Keypad ..... 3 × 4 matrix

Configurable inputs ..... Four

Outputs

Output 1 ..... 5 A @ 250 V ac/30 V dc (resistive load)

Output 2 ..... 5 A @ 250 V ac/30 V dc (resistive load)

Controls

External ..... Push-button volume control

Internal ..... Mic bias, reset switch, handset enable

Indicators

Internal ..... Power, Heartbeat, & EACT LEDs

Codecs and audio ..... G.711 A-Law
G.711 µ-Law
G.722
G.729
G.723.1 MP-MLQ
G.723.1 ACELP
Codec preference sequence
DTMF in-band / out-of-band (RFC2833)
Configurable comfort tones (to emulate national tones)

Configuration ..... Embedded web server
Embedded Telnet server
Configuration file download
Configuration file building tool (Vconf.exe)
Direct serial connection
(Nine-way D-type female connector)
Command line interface
SNTP with time zone and daylight saving
Automatic updating via TFTP
Password protection

Monitoring and reporting ..... Real-time over TCP/IP proprietary Syslog application or email
Embedded SMTP client
Automatic fault reporting

Compliance to Standards ..... FCC CFR 47 Part 15

Environmental

Operating temperature ..... −4º F to +131º F (−20º C to +55º C)
Humidity ..... 95% non-condensing

Mechanical

Enclosure ..... Cast aluminum with aluminized lacquer paint
Handset Cord ..... "G" style handset/PVC 6-foot extended length (standard)
Connection ..... RJ45 receptacle
Dimensions, outside ..... 10.25 W × 12.25 H × 9.50 D inches (260.3 × 311.1 × 241.3 mm)
Mounting ..... Wall or column, four 3/8-inch (10 mm) mounting feet with slots
Shipping weight ..... 30.0 lbs. (13.6 kg)
Net weight ..... 28.0 lbs. (12.7 kg)

Approvals

NRTL listed (USA and Canada) ..... Hazardous locations Class I, Division 1, Groups B, C, & D
Class II, Division 1, Groups F & G
Class III, Division 1
Type 4X
T6 – Gas
T4A – Dust

User Instructions (USA)

This equipment has been tested and found to comply with the limits for a Class A digital device, pursuant to part 15 of the FCC Rules. These limits are designed to provide reasonable protection against harmful interference when the equipment is operated in a commercial environment. This equipment generates, uses, and can radiate radio frequency energy and, if not installed and used in accordance with the instruction manual, may cause harmful interference to radio communications. Operation of this equipment in a residential area is likely to cause harmful interference in which case the user will be required to correct the interference at his own expense.