Outdoor Twist-To-Lock Photocell

WARNING: Do not attempt installation until you are familiar with all warnings, precautions, and procedures outlined within this instruction sheet.

1. Turn off power.
2. Line voltage must be the same as indicated on the photocontrol label.
3. Position and mount the photocontrol so that no artificial light will cause the control to accidently turn off at night. If light from the controlled lamp shines on the cell, the control will cycle (turn on and off repeatedly).
4. Wiring Procedure:
   a. Refer to the wiring diagrams below and choose the appropriate diagram.
   b. Connect the Black wire (Hot Line) to the Black wire of the photocontrol.
   c. Connect the Black wire of the light fixture to the Red wire of the photocontrol.
   d. For 120 volt units: Connect the White wire from the light fixture and the White wire from the photocontrol to the Neutral wire.
   e. Check all connections and make sure that there are no bare wires exposed.

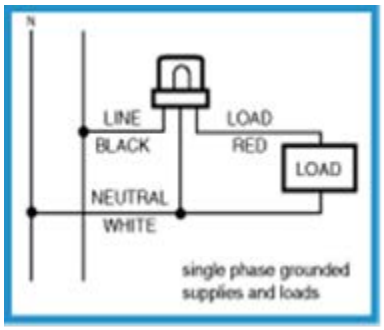

5. Turn power on.
6. Light fixture will turn on initially and then turn off within 2 minutes if the photocontrol is tested in daytime. If light fixture is tested at night, use a flashlight and shine the light directly on the cell. The light fixture should turn off in less than 2 minutes.
7. When mounting photocontrol to an enclosure or light fixture where condensation may occur, be sure that the control is oriented so that the wires exiting the photocontrol are pointed downward and route the wires to form a drip loop.
8. Should you have difficulty during installation, we suggest that you refer to the following:

Troubleshooting Chart

Problem	*Cause*	*Solution*
Light fixture remains ON at all times.	Incorrectly wired.	Refer to wiring diagram.
	Photocontrol not rated at the voltage being used.	Replace photocontrol with unit of the correct voltage rating.
	Contacts welded together due to an excessive load.	Replace photocontrol and connect only to a permissible load.
	Not enough light strikes ‘eye” of the photocontrol in daytime.	Reposition photocontrol in the direction of the most natural light.
	Line voltage exceptionally low.	Consult local utility to check voltage and take corrective steps.
Light fixture remains OFF at all times.	Incorrectly wired.	Refer to wiring diagram.
	Photocontrol not rated at the voltage being used.	Replace photocontrol with unit of the correct voltage rating.
	Line voltage exceptionally low.	Consult local utility to check voltage and take corrective steps.
Light fixture blinks during the day, but, remains ON at night.	Incorrectly wired.	Refer to wiring diagram.

Light fixture blinks during the day, but, remains OFF at night.	Incorrectly wired. Light from the load is directly or indirectly shining on the 'eye' of the photocontrol.	Refer to wiring diagram. Reposition photocontrol so that it is not subject to any artificial light.
Fuse blows when power is connected.	Incorrectly wired.	Refer to wiring diagram.
Photocontrol operates normally for a short time and then remains ON.	Contacts welded together due to an excessive load.	Replace photocontrol and connect only to a permissible load.

Should further information not covered by these instructions be required, please contact Larson Electronics by phone at 1-800-369-6671 or by email; sales@larsonelectronics.com for further assistance.

Please visit LarsonElectronics.com for **Warranty** and **Return** information.