BPLI-400W

Solar PPS Portable Power Supply

User Manual

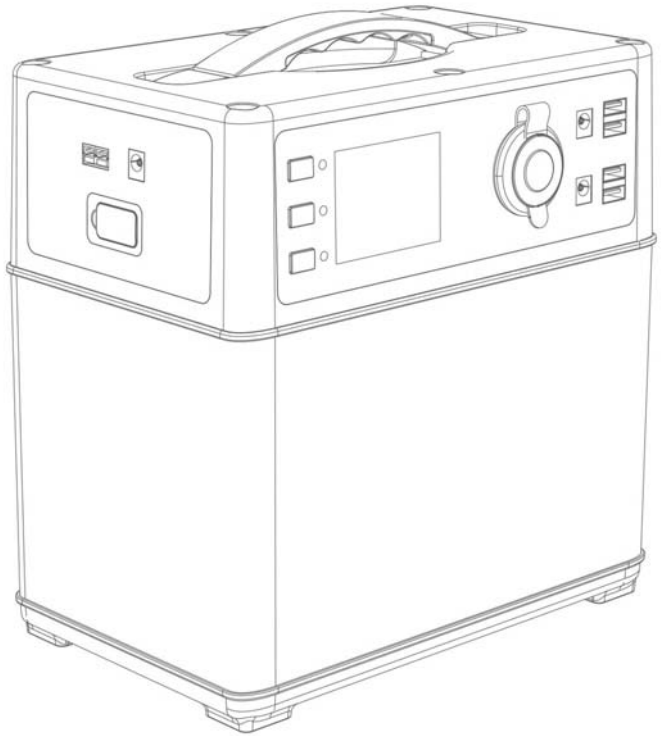

CHARGE ME NOW

Before reading through the rest of the manual, plug your PPS into the wall AC outlet for charging. You should store your PPS with energy inside always.

TABLE OF CONTENTS

This product series are designed to keep you powered while you're doing what you love. Whether you're climbing a mountain, living in your van while you travel the world, or camping in your backyard we will keep you powered. Welcome to the solar life.

CONTENTS

1. Get To Know Your Gear……2
2. Unpacking……3
3. What It Powers……4
4. Charging Your PPS……4
   - Charge Me Now……4
   - LCD Battery Display……4
   - Charging from Solar……5
   - Charging from the Wall……6
   - Charging from your Car……6
5. Using your PPS……7
   - What to power from your PPS……7
   - How to use your PPS……7
   - Best-Use Strategy……7
   - Cold Weather Usage……7
   - Storage and Downtime Maintenance……8
   - Emergency Car Jump Start……8
6. Technical Specifications……9
7. Frequently Asked Questions……10
8. Troubleshooting……11
9. Contact……13

Congrats on your solar PPS portable power supply, a plug-and play generator for emergencies, camping, or wherever you need power. With 400 watt-hours of power, you can keep laptops, lights, appliances, and refrigerators going for hours longer.

1. Get To Know Your Gear

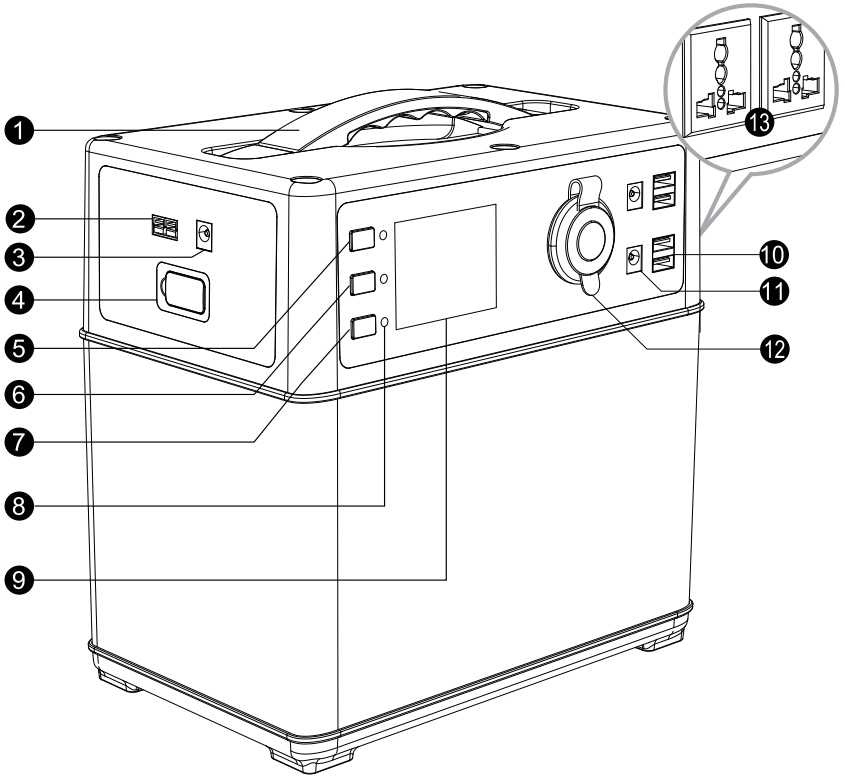

1. Handle
2. Solar Charging Port
3. Car/Adapter Charging Port
4. Car Jump Starter Output
5. Master Power On/Off Button
6. DC Power On/Off Button
7. AC Power On/Off Button
8. Power On/Off Indicators
9. LCD Display
10. USB Outputs
11. DC12V Output for LED Lamp
12. DC12.6V Car Cigarette Output
13. AC Outputs

1. Master Power On/Off Button
2. DC Power On/Off Button
3. AC Power On/Off Button
4. Master Power On/Off Indicator
5. DC Power On/Off Indicator
6. AC Power On/Off Indicator
7. Battery Capacity
8. Charging Power
9. DC ON/OFF
10. DC Output Power
11. AC ON/OFF
12. AC Output Power

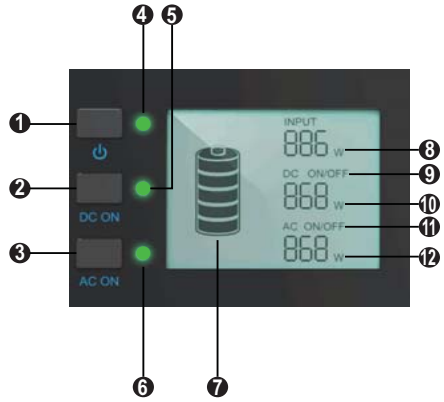

2. Unpacking

Before opening the package, please check if the packaging is damaged. After unpacking, please check if product appearance is damaged or there is missing parts. If so, please contact us.

PPS accessories are as follows.

No.	Item	Quantity
1	Portable Power Supply	1
2	AC Wall Charger	1
3	Car Charging Cable	1
4	Solar Charging Cable	1
5	Jump Starter Alligator Clip Cable	1
6	User Manual	1
7	Warranty Card	1

Unpacking your PPS





AC Charger



Car Charging Cable



Solar Charging Cable



Jump Starter Alligator Clip Cable

3. What it Powers



LAMP
100+ Hours

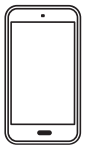

Smartphone
30+ Recharges

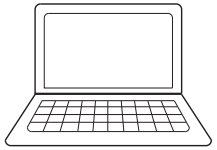

LAPTOP 5 Recharges

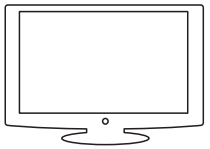

TV 3 Hours

4. Charging Your PPS

■ Charge Me Now

Before using or storing, plug your PPS into the wall until it is fully charged.

Note: NEVER charge your PPS with solar panels and a wall charger at the same time.

■ LCD Battery Display

The LCD Battery Display indicates the charge level. There are 5 segments of the battery, approximating 20%-40%-60%-80%-100% capacity. During Using, segments will disappear from the display, indicating the remaining capacity. When charging your PPS, you will notice a battery segment blinking at a 1 second interval. This indicates the current charge status and the number

under INPUT shows the real-time charging power. Once It is fully charged, all battery segments will be lit and remain solid.

Charge your PPS when there is only a battery segment!

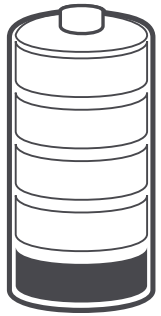

■ Charging from Solar

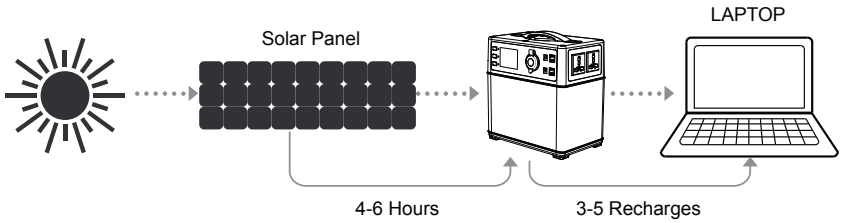

1. Power on your PPS by press master power button for 2 seconds.
2. Place your solar panel where it will get as much direct sunlight as possible.
3. Connect the solar panel by solar charging cable, then insert the Anderson plug into one of the INPUT ports on the left side of the PPS. You will know the PPS is charging when the number below INPUT on LCD changes and the battery segments in the LCD BATTERY DISPLAY are blinking. The PPS is fully charged when all battery segments stop blinking and remain solid.
4. You can also connect the PPS to other brands of solar panels using the Power-Pole port.
5. You can chain multiple Solar Panels together to reduce solar recharge times. Your PPS is capable of taking in 120W of solar charging power. But the solar panel voltage should be from 14V to 40V, like 18V, 36V, etc.
6. NEVER charge your PPS with solar panels and a wall charger at the same time.
7. The PPS will stop charging battery when it's full of energy, by the built-in advance system control circuit module.

■ Charging from the Wall

Before using or storing, plug your PPS into the wall until it is fully charged.

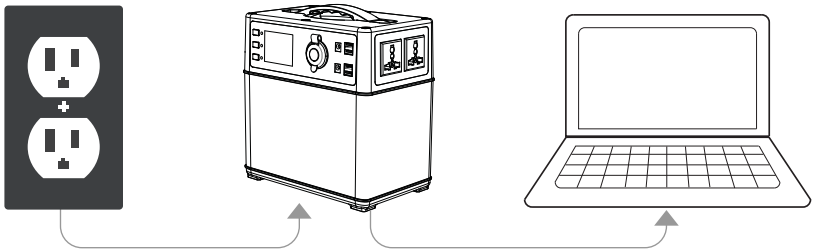

Using the included AC Wall Charger, plug your PPS into any wall outlet. You will know the PPS is charging when battery segments in the BATTERY DISPLAY are blinking and the number below INPUT on LCD changes.

The PPS is fully charged when all battery segments stop blinking and remain solid. The PPS should recharge from the wall in 6-8 hours. The PPS will stop charging battery when it's full of energy.

The AC wall charger comes in two pieces. Connect the two pieces by plugging the cable into the box.

■ Charging from Your Car

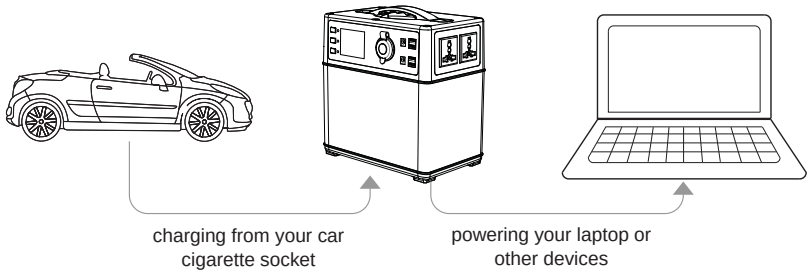

Use the car charging cable, plug one end to your car cigarette socket and the other end to your PPS. You will know the PPS is charging when battery segments in the BATTERY DISPLAY are blinking and the number below INPUT on LCD changes. It's a good choice to charging your PPS when you drive all the way.

Note: Car with 12V starting battery can't charge this PPS fully, but car with 24V battery can.

5. Using your PPS

■ What to power from your PPS

USB: Smartphones, MP3 Players, Digital Cameras, E-readers, Tablets, etc.

DC 12V 6mm Ports: Two ports for LED lights mainly

DC 12.6V Car Socket: Car on-board Fridges, 12V appliances, etc.

AC: Laptops, Cameras, Display Monitors, Appliances, etc.

■ How to use your PPS

1. Press the master POWER button for 2 seconds to turn on your PPS, then the power indicator and LCD will be lit up.
2. Press the DC power button under the master POWER button for 2 second to power DC device. Press the AC power button under DC power button for 2 second to power AC device. When not using certain ports, make sure to turn them off to conserve power.
3. You will know if it's powering other device when the numbers under DC ON/OFF and AC ON/OFF in LCD changes. The numbers indicate the amount of power your devices are pulling from the PPS.
4. Plug in your gear for power anywhere life takes you.
5. Press the AC ON, DC ON, master POWER button for 2 seconds to shut down the AC output, DC output and system respectively.
6. When the master POWER button is on, but DC power button and AC power button are off, the system will shut down automatically in 10 minutes. You need to press the master POWER button for 2 seconds again to restart.
7. The system will shut down when the battery capacity is lower than its 10%.
8. Always remember to shut the product down if you don't use it.
9. If possible, keep your PPS fully charged before long-term non-use.

■ Best-Use Strategy

When charging gear with your PPS, take note of the LCD Battery Display. If you plug in devices that drain a high power (a refrigerator), the charge level of your PPS can drop very quickly and you may not get exactly 400 Wh energy. On the flipside, if you're recharging devices that draw power more slowly (a small TV), you will get closer to 400 Wh from your PPS. If you're experiencing shorter runtimes, you may want to check the device's power requirements, see TROUBLESHOOTING for help.

■ Cold Weather Usage

Cold temperatures (below freezing) can impact the PPS's battery capacity.

If you'll be living off-grid in sub-zero conditions, you can drain power from PPS. But never charge your PPS in sub-zero conditions, which will damage the lithium ion battery and battery capacity may not be recovered.

Low Temperature Charging Protection: when there is charging input in sub-zero conditions, the system would stop charging automatically; and system starts charging function again when temperature is over 5℃ .

Low Temperature Discharging Protection: in -20 ℃ conditions, the system would stop AC and DC output and shut the product down in 15 seconds automatically; and system can output again when temperature is over-15℃ .

■ Storage and Downtime Maintenance

1. Please charge your PPS fully before storage and fully recharge your PPS every 3 months and store it in a cool, dry place.
2. If the system shuts down automatically because of lower battery capacity(10%), please recharged it in 2 months. Otherwise, the battery capacity won't be recovered.
3. Failure to maintain your PPS by following these steps can result in battery damage which will void the product warranty.

■ Emergency Car Jump Start

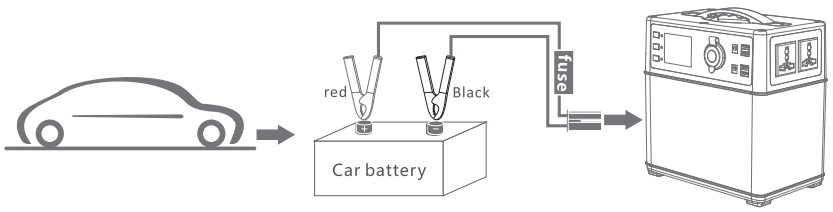

1. Make sure the engine displacement of the vehicle (or other motor vessels, here take a car for example) is less than 4L.
2. Make sure the power is over 60% (four battery segments on).
3. Make sure the clamps on jump start cable is not broken.

How to Jump Start

1. Clamp the red clip to car battery positive pole and the black clip to the battery negative pole.
2. Plug the other end of jump start cable into your PPS.
3. Turn the key to start your car as normal.
4. After starting, remove the cable from this product first, then remove red and black clip.

⚠ Notice

1. Before starting, make sure the red and black clips are clamped tightly to car battery poles and keep the two clips with enough safety distance, to prevent the two from falling off or collision because of the engine vibration after car starting.
2. It is strictly prohibited to connect the red and black clip directly, otherwise it may cause accidents.
3. Please keep away from the engine when starting the car to avoid any physical injury that may caused by car engine running.
4. Please remove the product from car battery within 30 seconds after engine started, otherwise it might cause damage to PPS or even cause accident.
5. Please check the battery capacity before every re-start.(Make sure the power is over 60% (four battery segments on)
6. People who are not familiar with this product (especially children) is strictly prohibited to use car start-up function.

6. Technical Specifications

	Item		Specification
Approx. Charge Times	AC	Wall Charger (70W)	6~8 hrs
	DC	Car Charger (48W)	10~20 hrs
	Solar	Solar Charger(120W)	4~6 hrs
	Charge Input Voltage		14V~40V
Output	AC	Output Voltage	100/110/120V AC±3% OR 220/230/240V AC±3%
		Output Frequency	50/60Hz±0.5Hz
		Output Power	300W (Pure Sine Wave)
		Peak Output Power	600W
	DC	4×USB Port	2×5V2.1A &2×5V1A
		1×12.6V Car Port	120W
		2×DC 6mm Port	2×12V3A
Jump Starter	Starting Current		200A~400A@12V

Battery	Battery Type		Lithium ion
	Battery Cell		Li-ion 18650
	Battery Capacity		400Wh
	Battery Voltage		9V~12.6V
General	Dimension		L233×W148×H237(mm)
	N.W.		5.6Kg
	Warranty		Please check Warranty Card for details
	Operation Environment	Charge	0~45℃
		Discharge	-10℃ ~60℃
		Humidness	10%~90%

Note:Jump starter function with higher cost is optional.

Note: Solar charging and AC charging should not proceed at the same time!

7. Frequently Asked Questions

■ What type of battery is in my PPS?

Your PPS uses a 11.1V36Ah lithium ion battery pack,similar size like Tesla Motor EV battery cell. Li-ion battery single is much smaller and lighter weight than normal SLA battery and also cycles much longer time than normal SLA or AGM battery. But Li-ion batteries last longer if you do not drain them completely.

■ How do I know if my PPS is charged?

To check the charge level of your PPS, refer to the LCD Battery Display. When lit up, you'll see a battery outline with five segments, indicating the current charge level. You can turn on the Battery Display by pushing the Master POWER button. It is OK to use your PPS even when it's not fully charged.

■ How do I know if my device will work with the PPS?

First, you'll need to determine the amount of power your device requires. This may require some research on your end, a good Google search or examining the user guide for your device should suffice.

Second, you will need to check the capacity for the individual output ports. For example, the AC port is monitored by an inverter that allows for 300W of continuous power. This means if your device is a pulling more than 300W for an extended period of time, the PPS's inverter will shut off. Finally, once you know your device is compatible, you'll want to determine how long you'll be able to power your gear from the PPS. Here's a quick lesson as below.

■ Here are some common devices and their watt-hour requirements:

Device Power from PPS

Smartphone (8~10Wh) 30+ Recharges

Tablet (25~42Wh) 7+ Recharges

Laptop (50Wh) 5+Hrs

Desktop Computer (100W) 2~3 Hrs

Mini Fridge (30~60W) 4~10Hrs

32" LCD TV (98~156W) 2~4Hrs

Vacuum Cleaner (200~300W) 1~2Hrs

Blender/Processor (200~300W) 1~2Hrs

So when you're deciding on what to power from your PPS, do some research into your device's wattage consumption.

There is 400Wh battery built inside. But when the device draws big power near 300W, the discharge capacity rate is about 90%. Also, there will be energy loss when battery's DC power transferred to AC power and different loads also influence the transfer efficiency.
Why the transfer efficiency is only 90% when drawing big from battery?
1) Lengthen battery cycle life
2) Make sure long term storage won't cause battery damage after using
Certainly, low power consumption will drain more energy.
The computational formula of theoretical discharge capacity as below.
discharge capacity = nominal capacity x depth of discharge x transfer efficiency = 400Wh x 0.9 x 0.86 =309.6Wh.

NOTE: the real discharge capacity may be a little different with the ideal value.
NOTE: The AC output power value in LCD maybe not very accurate,specially when power consumption is low.

8. Troubleshooting

If your devices are not recharging from your PPS, follow these steps:

1. Make sure the Master POWER button is turned on.

2. Ensure the Output Port has been turned on. The green LED light on the power button should be lit up.

3. Check the Battery Display. If it is at 20% or below, charge your PPS.

4. Verify your device is suitable for use with the PPS. All of the PPS output ports have their own max power capacity. Check the PPS's Tech Specs to ensure your device is compatible.

If you are still experiencing trouble with your PPS after checking and troubleshooting as below form, please call our Customer Service Center.

Failure Code	Failure Cause	Troubleshooting
E01	System over-temperature protection	Check the ambient temperature if higher than 45℃ . Output will start again if PPS cools down.
E02	Battery Over Voltage Protection	Disconnect the charger and restart it
E03	Battery Damage Protection	Contact the Customer Service Center
E04	1st Battery String Over-Voltage	Disconnect the charger and restart it
E05	2nd Battery String Over-Voltage	Disconnect the charger and restart it
E06	3rd Battery String Over-Voltage	Disconnect the charger and restart it
E07	1st Battery String Low Voltage	Charge it in time and restart it after fully it's fully charged
E08	2nd Battery String Low Voltage	Charge it in time and restart it after fully it's fully charged
E09	3rd Battery String Low Voltage	Charge it in time and restart it after fully it's fully charged
E10	Low Temperature Discharging Protection	Charge if the ambient temperature is lower than -20℃
E11	Battery Low Voltage Protection	Charge it in time and restart it after fully it's fully charged
E12	Inverter Over Current Protection	Check if the AC output overload or short-circuit
E13	Inverter Over Load Protection	Check if the AC output overload
E14	Inverter Short-Circuit Protection	Check if the AC output overload or short-circuit
E16	Charging Over Voltage Protection	Check if the input voltage excess the maximum
E17	Low Temperature Charging Protection	Check if the ambient temperature is lower than 0℃

E19	12.6V10A Output Over Current Protection	Check if the output overload or short-circuit
E20	12.6V10A Output Over Load Protection	Check if the output overload
E21	12V3A Output Over Current Protection	Check if the output overload or short-circuit
E22	12V3A Output Over Load Protection	Check if the output overload
E23	USB5V No.1 Output Over Current Protection	Check if the output overload or short-circuit
E24	USB5V No.2 Output Over Current Protection	Check if the output overload or short-circuit

9. Contact

Should you have any technical questions, please contact Larson Electronics.

Phone: 800-369-6671 or 903-498-3363

Email: sales@larsonelectronics.com

Website: LarsonElectronics.com