LARSON ELECTRONICS®

READ AND SAVE THESE INSTRUCTIONS

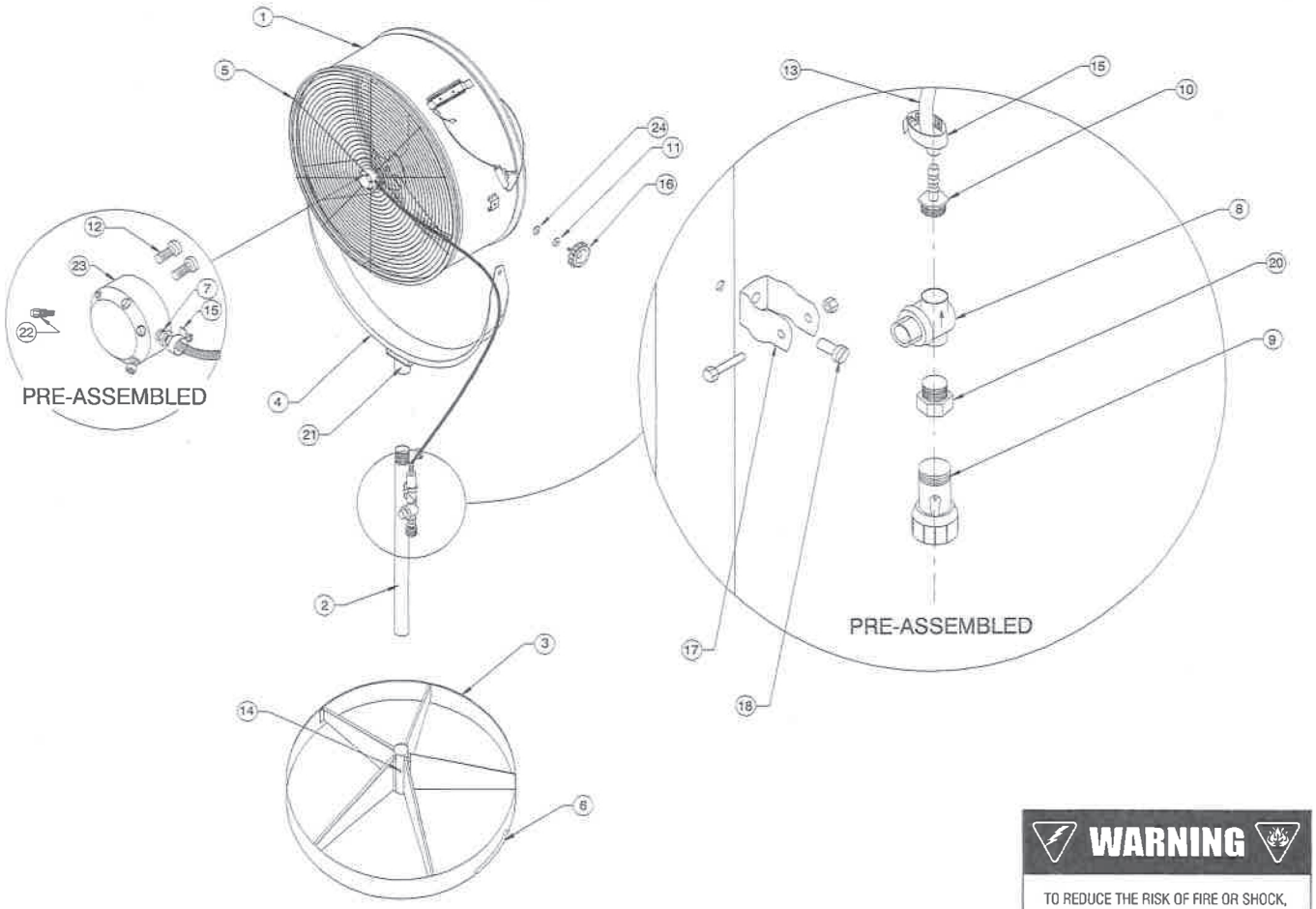

IMPORTANT: READ AND SAVE THESE INSTRUCTIONS

ASSEMBLY INSTRUCTIONS

1. Lay base (3) on flat surface.
2. Insert pedestal (2) with threaded side up. Insert non threaded end into base and with the allen wrench, tighten set screw (14) into to threaded end of pedestal.
3. Thread yoke (4) into threaded end of pedestal.
4. Lay the pedestal and yoke on the ground mister nozzle side up and move the barrel into a position to mount the yoke to the two brackets on either side of the barrel. Make sure that the hose connector is facing to that side of the yoke that has the hose holder (34). Fit lock washer and flat washer (11) & (24) on the knobs (16) and thread into yoke and barrel brackets. Both sides.
5. Connect hose (13) to hose connector (10) and tighten down hose clamp.

GENERAL MAINTENANCE

1. When not in use store fan under cover.
2. This fan has 3 filtering points. There is an inline filter in item (20). This inline filter need to be cleaned periodically. Item (8) is a water filter which requires periodic cleaning. Remove the threaded housing and clean the filter element. All the nozzles have individual filters integral to the nozzle and are located in the nozzle head assembly which is located at the center of the front guard. These nozzles need to be cleaned with warm water to clean out any deposits that may have formed during operation.

BEFORE OPERATING READ SAFETY INSTRUCTIONS ON BACK PAGE

ITEM		QTY.	DESCRIPTION
1		1	HOUSING ASS'Y
2		1	PEDESTAL ASS'Y
3		1	BASE ASS'Y
4		1	YOKE
5		16	SCREW, HEX W.HD, #14 x 3/4
6		1 (set)	FOOT-RUBBER
7		1	1/2 NPT BARB CONNECTOR (1/4 to 3/8)
8		1	FILTER
9		1	ON/OFF VALVE
10		1	HOSE CONNECTOR (1/2 NPT to 3/8)
11		2	LOCK WASHER
12		2	MISTING HEAD SCREWS
13		1	HOSE 41"
14		1	SET SCREW (BASE)
15		2	HOSE CLAMP
16		2	KNOB
17		1	CLAMP
18		1	SCREW #14 x 3/4"
19		1	MOTOR ASSEMBLY W/CORD
20		1	1/2 NPT ADAPTOR
21		1	SET SCREW (YOKE)
22		3	NOZZLE
23		1	MISTING HEAD
24		2	FLAT WASHER

WARNING

TO REDUCE THE RISK OF FIRE OR SHOCK, DO NOT USE THIS FAN WITH ANY SOLID STATE SPEED CONTROL DEVICE.

USE ONLY ON GFCI PROTECTED RECEPTACLES

SPECIFICATIONS SUBJECT TO CHANGE WITHOUT NOTICE.

LARSON ELECTRONICS, LLC | 9419 US-175 KEMP, TX 75143 | (800)369-6671 | SALES@LARSONELECTRONICS.COM