EPLX-HB-60W-RD2-LED-TRC-xxxV-xxK Manual

60W Explosion Proof High Bay AC LED Light Fixture

1. General Information

EPLX-HB-60W-RD2-LED-TRC Luminaires are suitable for use in the following hazardous (classified) areas as defined by the National Electrical Code (NEC) and Canadian Electrical Code (CEC):

- Class I, Division 1, Groups B, C, D
- Class II, Division 1, Groups E, F, G
- Wet Locations (UL 1598)

Refer to the luminaire nameplate for specific classification information, maximum ambient temperature suitability and corresponding operating temperature (T-Code).



EPLX-HB-60W-RD2-LED-TRC LED Luminaire is designed for using indoors and outdoors.

Voltage Options: 120/208/220/240/277 Vac 50/60 Hz
Ambient Temperate Range: -60°C to +100°C

⚠WARNING

- To avoid the risk of fire, explosion or electric shock, this product should be installed, inspected and maintained by a qualified electrician only, in accordance with all applicable codes and regulations.
- To avoid electric shock:
  - ✓ Be certain electrical power is OFF before and during installation and maintenance.
  - ✓ Luminaire must be supplied by a wiring system with an equipment grounding conductor.
- To avoid explosion:
  - ✓ Make sure that the supply voltage is the same as the luminaire voltage.
  - ✓ Do not install where the marked operating temperatures exceed the ignition temperature of the hazardous atmosphere.
  - ✓ Do not operate in ambient temperatures above those indicated on the luminaire nameplate.
  - ✓ All gasket seals must be clean and undamaged.
  - ✓ Before dismounting, electrical power to the luminaire must be turned off. Keep tightly closed when in operation.
- To avoid burning hands, ensure the luminaire is cool when performing maintenance.

2. Dimensions (All Dimensions in mm)

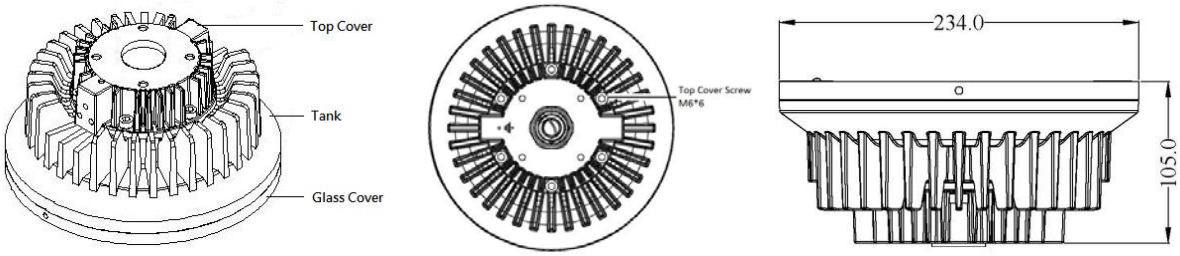

3. Model Code

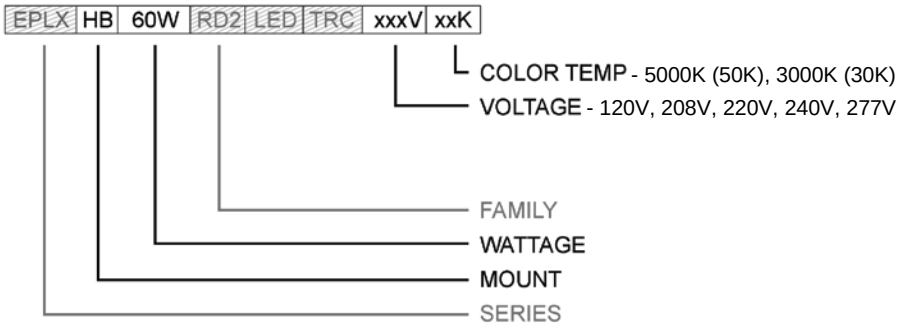

•• Mount, Wattage, Voltage and Color Temp are variable.

4. Technical Data

Item	Description
Voltage Options	120/208/220/240/277 Vac 50/60 Hz
Ambient Temperate Range	-60°C to ~ +100°C
Material **Enclosure** **Glass**	 Aluminum alloy Heat and impact resistant tempered glass
LED Service Life	60,000+ hrs
Entrance Hole	NPT 3/4” threaded holes
Mounting Type / Weight	Pendant mounted via a 3/4" hub on the back side of the fixture
	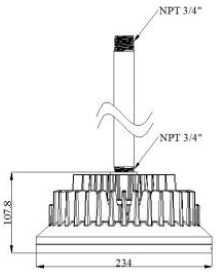
	12.1 lbs

5. Assembly and Installation

5.1 Electrical Connection

- ☞ Loosen the 6*M6 screws on Top Cover of the luminaire (Tank).
- ☞ The thread of cable entry hole of Top Cover is NPT 3/4”. Attach the Top Cover to suitable conduit.
- ☞ Insert the cable from outside through the conduit and the cable entry hole of Top Cover.
- ☞ Introduce the wires of the luminaire with wires of field wiring by attached closed-end-terminals as following (see picture)

Black – wire connects to Neutral
Red – wire connects to Line
Green – wire connects to Ground

- ☞ Re-attach the Top Cover and tighten it by respective 6*M6 screws with torque value 24.5 kgf-cm.
- ☞ Check the tightness of conduit and Top Cover.

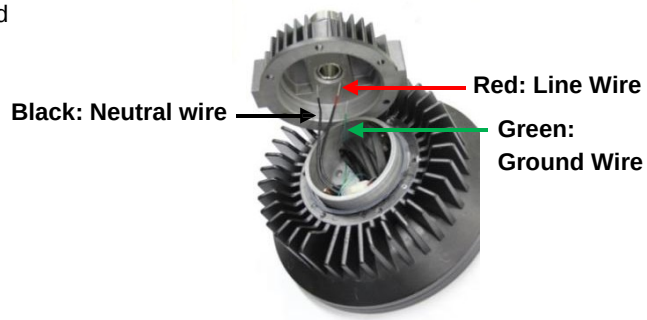

5.2 Pendant Mounting

- ☞ Supplement for the Item 5.1 – Electrical Connection.
  The thread of cable entry hole of Top Cover is NPT 3/4”.
- ☞ Insert the cable from outside through the straight electrical tube and the cable entry hole of Top Cover.
- ☞ Introduce the wires of the luminaire with wires of cable by attached closed-end-terminals as indicated in Item 5.1 – Electrical Connection.
- ☞ Attach straight electrical tube to the Top Cover.
- ☞ One end of tube mounting male threads 3/4” NPT is securing to Top Cover and the other end of tube mounting male threads of 3/4” NPT is for supply connection in the field by AHJ.
- ☞ Thread the tube mounting on conduit and torque until wrench-tight.
- ☞ Tighten tube locking set screw to conduit, 1.0 N-m. (Figure 1)

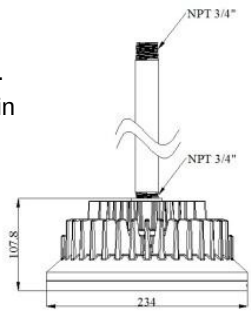

5.3 Putting into Service

Before putting into operation, it is necessary to ensure that:

- ☞ The light fixture is correctly installed.
- ☞ The connections have been properly made.
- ☞ The field wiring has been installed correctly by an Authority Having Jurisdiction (AHJ).

6. Maintenance

- To avoid personal injury, disconnect power to the light and allow the unit to cool down before performing maintenance.
- Perform visual, electrical, and mechanical inspections on a regular basis. The environment and frequency of use should determine this. However, it is recommended that checks be made at least once a year. Frequency of use and environment should determine this. It is recommended to follow an Electrical Preventive Maintenance Program as described in the National Fire Protection Association Bulletin NFPA No. 70B: Recommended Practice for Electrical Equipment Maintenance.
- The lens should be cleaned periodically to ensure continued lighting performance. C lean the lens with a clean, damp, non-abrasive, lint-free cloth. If this is not sufficient, use a mild soap or a liquid cleaner. Do not use an abrasive, strong alkaline or acid cleaner as damage may occur.
- Inspect the cooling fins on the luminaire to ensure that they are free of any contamination (i.e. excessive dust build-up). Clean with a non-abrasive cloth if needed.
- Electrically check to make sure that all connections are clean and tight.
- Mechanically check that all parts are properly assembled.

7. Transport, Storage and Disposal

- Transport and storage is only allowed in the original packaging, on the way pointed out on the carton box.
- Transport – Shock-free in its original carton, do not drop, and handle carefully.
- Store – Store in a dry place in its original packaging.
- Disposal – Ensure environmentally friendly disposal of all components according to the legal regulations.