Panel Fan Series Operators Manual (Galvanized and Polymer)



Galvanized Panel Fan with Three Wing Blade

IMPORTANT: READ AND SAVE THESE INSTRUCTIONS

Read all instructions carefully before attempting to assemble, install, operate or service the product described. Failure to comply with instructions could result in personal injury and/or property damage.

Using this product for any other purpose than it was intended, or not within the operating specifications in this manual will void the warranty and may cause damage to the fan or serious injury to personnel.

WARNING - TO REDUCE THE RISK OF FIRE OR ELECTRIC SHOCK:

- Do not expose fan to water or rain.
- The power source must conform to the electrical requirements of the fan. Consult your local electrician before wiring and follow all local and state electrical codes.
- Disconnect all power before performing maintenance.

GENERAL SAFETY

- This fan is intended for general use only. Do not use near hazardous or explosive materials or vapors.
- Never insert fingers or any other objects into the fan when in operation.
- Use of an OSHA complying guard if within seven feet of floor is recommended.
- Use of a guard if above seven feet of floor is recommended.
- Carefully read all safety messages in this manual and on your equipment safety decals. Follow recommended precautions and safe operating practices.

KEEP THIS MANUAL IN A CLEAN, DRY PLACE FOR FUTURE REFERENCE.

All information, illustrations and specifications in this manual are based on the latest product information available at the time of printing. Product specifications subject to change. We reserve the right to make changes at any time without notice.

If you need replacement parts, please contact your dealer. Take special care when ordering replacement blades, pulleys, motors and belts to ensure you get the proper configuration for your fan. If you do not have that information, please call Larson Electronics at 800-369-6671 for assistance.

SAFETY INFORMATION

Warning and danger decals have been placed on the equipment to warn of potentially dangerous situations. Care should be taken to keep this information intact and easy to read at all times. Replace missing or damaged safety decals immediately.

Safety decal locations

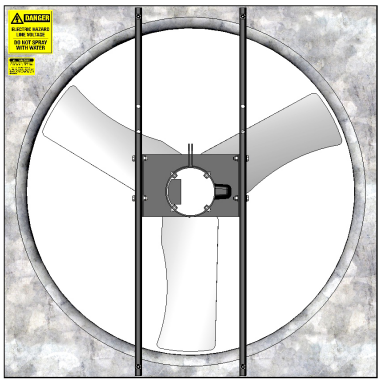

IMPORTANT!

Larson Electronics strongly recommends that a good alarm system be installed in confinement build-ings to warn of power failure and high temperature. Larson Electronics also recommends that an alternate power source be available for confinement buildings in case of power failure.

FAN MODEL NUMBER

The model number and date of manufactured information is located on a label attached to the motor pan. *Refer to this information when requesting service/information or parts.*

INSTALLATION INFORMATION

The installation information is not the same for all panel fans. Refer to the Rough-In Opening Dimension chart for the correct opening for your product.

The Fan can be mounted in three ways:

1. Fan unit mounted in the building side wall. (Galvanized Panel Fans Only)
2. Fan unit suspended from the ceiling.
3. Fan unit attached to pole/post mount.

Build wall framing to the required wall opening illustrated in the chart here.
The fans are shipped completely assembled and need only to be fastened to the wall framing with appropriate fasteners for your facility (not supplied).

Rough-in Opening Dimensions

Model #	Width (A)	Height (B) *
24"	30-1/8"	30-1/8"
30"	36-1/8"	36-1/8"
36"	42-1/8"	42-1/8"
42"	48-1/8"	48-1/8"
48"	54-1/8"	54-1/8"
52"	55-3/4"	55-3/4"
54"	60-1/4"	60-7/8"

* Rough-in Framing Tolerance: +1/8"/-0"

Suggested rough-in frame construction

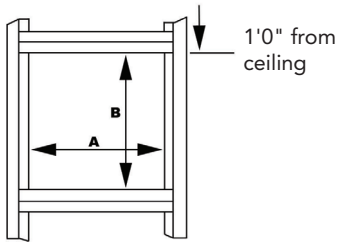

INSTALLATION INSTRUCTIONS

1. After you have made the opening in the wall, the fan unit can be placed into the opening and secured with fasteners appropriate for your application. Refer to the air flow directional arrow to ensure the fan is installed in the correct direction to achieve the desired air flow.
2. Flashing should be attached across the top of the fan on the outside of the building. Caulking can be used on the sides of the fan housing to assure a tight seal.
3. Once the unit has been securely fastened to the wall, the fan is ready to be wired.

POWERING THE FAN:

CAUTION:
ALL ELECTRICAL WORK SHOULD BE COMPLETED BY QUALIFIED ELECTRICIAN AND MEET ALL NATIONAL, STATE AND LOCAL CODES.

INSTRUCTIONS FOR WIRING

- Wiring should only be done by a trained electrician to prevent injury or possibly death.
- Configure internal wires to match supply voltage and wire according to motor nameplate. Test to verify correct rotation.
- Many of the electric motors in our fans are reversible. Make sure the fan is rotating in the proper direction (see BLADE ROTATION ARROW LABEL on the fan housing). Follow instructions on the motor label to change rotation if necessary.
- Larson Electronics recommends installing a lockable disconnect switch near each fan.
- Route wire to motor with drip loop and secure. Drip loop will drain accumulated moisture away from the motor.
- Only permit power to unit when motor cover plate is properly installed to prevent injury.

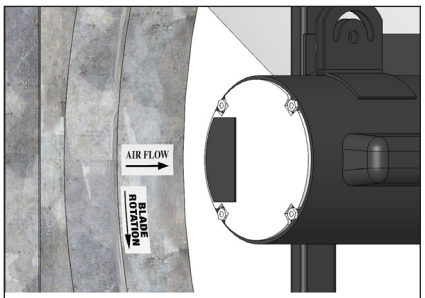

Fan blade rotation direction

MAINTENANCE

The fan you have purchased is built with heavy duty components, designed to give you many years of worry-free performance. Like anything else that is mechanical, your fan will require a small amount of periodic maintenance to assure maximum efficiency.

Disconnect power before cleaning or maintaining your fan in order to prevent serious injury or even death.

PERFORM EVERY 6 MONTHS
Clean motor, fan blade and guard option



- Service and repair of fan should only be completed by a qualified technician.
- Use an air hose to remove dust.
- Use a damp cloth to remove grime and grease.
- PRESSURE WASHING WILL VOID WARRANTY.
- Do not use harsh chemicals or cleaners to clean any part of the fan.
- Sealed motor bearings are pre-lubricated and do not require servicing.

CAUTION: Fasteners may loosen over time. It is important to check and tighten fasteners frequently.
CAUTION: Inspect fan components and fasteners frequently for corrosion. Replace any corroded fasteners or parts.

SET SCREW TIGHTENING SCHEDULE

1. Before initial operation of the fan, tighten set screws according to the procedure outlined below.
2. After 500 operating hours or three months, whichever comes first, tighten set screws to the full recommended torque.
3. At least once a year, tighten set screws to the full recommended torque.

PROCEDURE FOR TIGHTENING SET SCREWS IN BEARINGS AND BLADES

ONE SET SCREW APPLICATION

Using a torque wrench, tighten the set screw to the full torque recommended in Table 1.

TWO SET SCREW APPLICATION

1. Using a torque wrench, tighten the one set screw to half of the torque recommended in Table 1.
2. Tighten the second set screw to the full recommended torque.
3. Tighten the first set screw to the full recommended torque.

Table 1. Recommended Tightening Torque for Set Screws

Set screw diameter	Torque (in-lbs)
#10	35
1/4	80
5/16	126
3/8	240

BELT DRIVE FANS ONLY

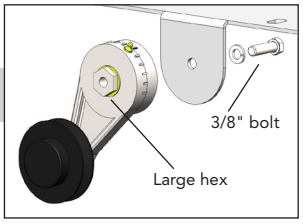

PERFORM EVERY 6 MONTHS

CHECK BELT TENSION

- Belt tension should be just tight enough to minimize slipping, but not so tight as to cause premature wear. Correct tension is 3/4" deflect at 10 lbs. of force.
- When a new belt is installed, the indicator on the idler base should line up between the third and fourth notch on the idler arm.
- To increase tension from idler arm, while holding the hex on the face of the idler, loosen the 3/8" attaching bolt. Release the large hex and rotate the idler base clockwise. Now hold the large hex stationary and re-tighten the 3/8" attaching bolt, making sure the larger hex does not turn. To decrease belt tension, rotate base counter-clockwise. After adjustment, verify idler arm moves freely.

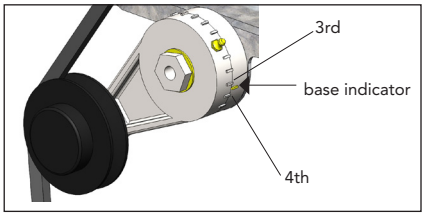

EVERY 800 HOURS OF OPERA-

GREASE THE BEARINGS

- While slowly turning the bearing, use 1-2 shots of a lithium base NLGI #2 grease from a hand operated grease gun to adequately fill the bearing 30-50% full.

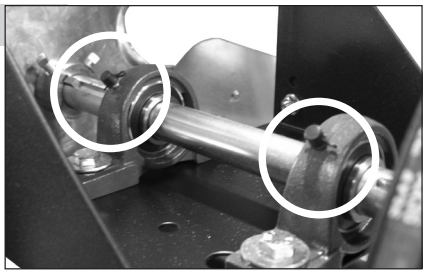

Note: Verify that the grease seals on both sides of the bearing are intact and not showing signs of displacement or deformation once greasing activities have been completed. Over greasing bearings will cause premature failure of bearings if seals are compromised.

TROUBLESHOOTING

SYMPTOM	POSSIBLE CAUSES	CORRECTIVE ACTION
Fan not operating	1. Improper wiring 2. Fan control set above room temperature 3. Blown fuse or tripped breaker 4. Fan blade contacting fan 5. Fan control defective 6. Motor defective	1. Ensure wiring is done correctly 2. Set to a lower temperature 3. Replace fuse or reset breaker 4. Realign fan blade in fan housing 5. Repair or replace control 6. Repair or replace motor
Insufficient airflow	1. Shutter jammed 2. Guard, shutter, fan blade dirty 3. Fan blade facing wrong direction 4. Incorrect belt tension	1. Clean shutter and fan housing 2. Clean guard, shutter and fan blade 3. Orient fan blade correctly 4. See **Maintenance** section
Excessive fan noise	1. Fan blade contacting fan panel 2. Motor bearing defective	1. Realign fan blade in fan housing 2. Repair or replace motor
Excessive vibration	1. Motor loose in mount 2. Fan blade damaged 3. Motor shaft bent 4. Fan shaft bent 5. Pillow block bearings defective	1. Tighten fasteners 2. Replace fan blade 3. Repair or replace motor 4. Replace fan shaft 5. Replace pillow block bearings
Fan does not turn off	1. Thermostat set incorrectly 2. Control set for continuous operation	1. Set to the desired temperature 2. Set fan control correctly

AC Induction Motor Performance Data

Record # 33669 - Typical performance - not guaranteed values

Winding: 35WGM492-R005	**Type:** 3520M	**Enclosure:** XPFC

Nameplate Data				460 V, 60 Hz: High Voltage Connection	
Rated Output (HP)	1//.75			Full Load Torque	2.99 LB-FT
Volts	230/460//190/380			Start Configuration	direct on line
Full Load Amps	3/1.5//2.8/1.4			Breakdown Torque	13.5 LB-FT
R.P.M.	1760//1460			Pull-up Torque	8.25 LB-FT
Hz	60//50	Phase	3	Locked-rotor Torque	8.52 LB-FT
NEMA Design Code	B	KVA Code	L	Starting Current	12.4 A
Service Factor (S.F.)	1			No-load Current	1.07 A
NEMA Nom. Eff.	85.5	Power Factor	71	Line-line Res. @ 25ºC	15 Ω
Rating - Duty	40C AMB-CONT			Temp. Rise @ Rated Load	36°C
				Locked-rotor Power Factor	53.8
				Rotor inertia	0.118 LB-FT2

Load Characteristics 460 V, 60 Hz, 1 HP

% of Rated Load	25	50	75	100	125	150
Power Factor	29	46	60	69	75	79
Efficiency	74.2	82.9	85.4	85.8	85.4	84.5
Speed	1790	1781	1771	1760	1749	1736
Line amperes	1.11	1.24	1.39	1.59	1.83	2.11

Performance Graph at 460V, 60Hz, 1.0HP Typical performance - Not guaranteed values

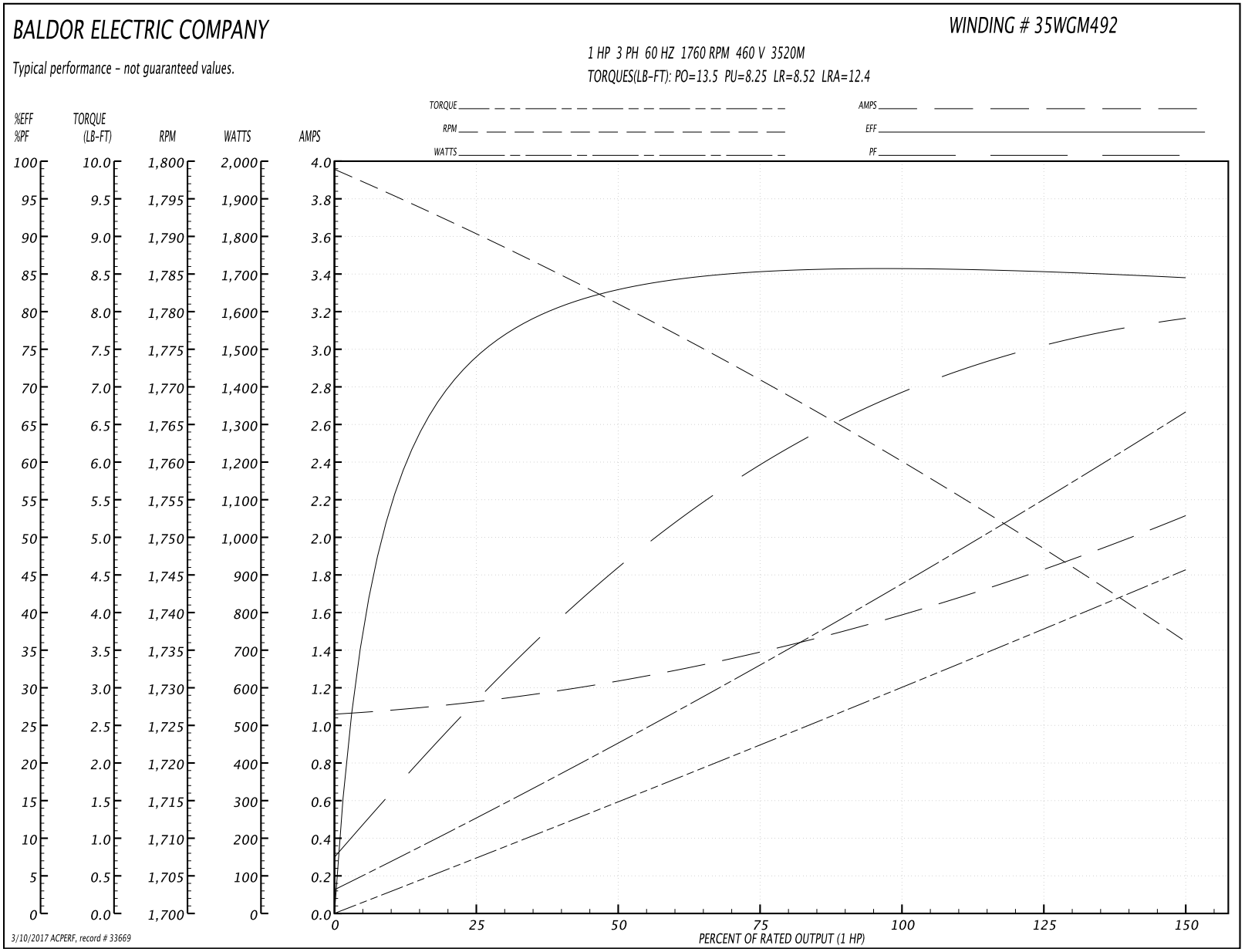

AC Induction Motor Performance Data

Record # 33670 - Typical performance - not guaranteed values

Winding: 35WGM492-R005	**Type:** 3520M	**Enclosure:** XPFC

Nameplate Data				380 V, 50 Hz: High Voltage Connection	
Rated Output (HP)	1//.75			Full Load Torque	2.7 LB-FT
Volts	230/460//190/380			Start Configuration	direct on line
Full Load Amps	3/1.5//2.8/1.4			Breakdown Torque	12.4 LB-FT
R.P.M.	1760//1460			Pull-up Torque	8.17 LB-FT
Hz	60//50	Phase	3	Locked-rotor Torque	8.44 LB-FT
NEMA Design Code	B	KVA Code	L	Starting Current	11.6 A
Service Factor (S.F.)	1			No-load Current	1.05 A
NEMA Nom. Eff.	85.5	Power Factor	71	Line-line Res. @ 25ºC	15 Ω
Rating - Duty	40C AMB-CONT			Temp. Rise @ Rated Load	32°C
				Locked-rotor Power Factor	59.5
				Rotor inertia	0.118 LB-FT2

Load Characteristics 380 V, 50 Hz, 0.75 HP

% of Rated Load	25	50	75	100	125	150
Power Factor	28	44	58	67	74	79
Efficiency	73.1	81.9	84.4	85	84.5	83.5
Speed	1491	1482	1473	1464	1453	1442
Line amperes	1.08	1.19	1.32	1.49	1.71	1.96

Performance Graph at 380V, 50Hz, 0.75HP Typical performance - Not guaranteed values

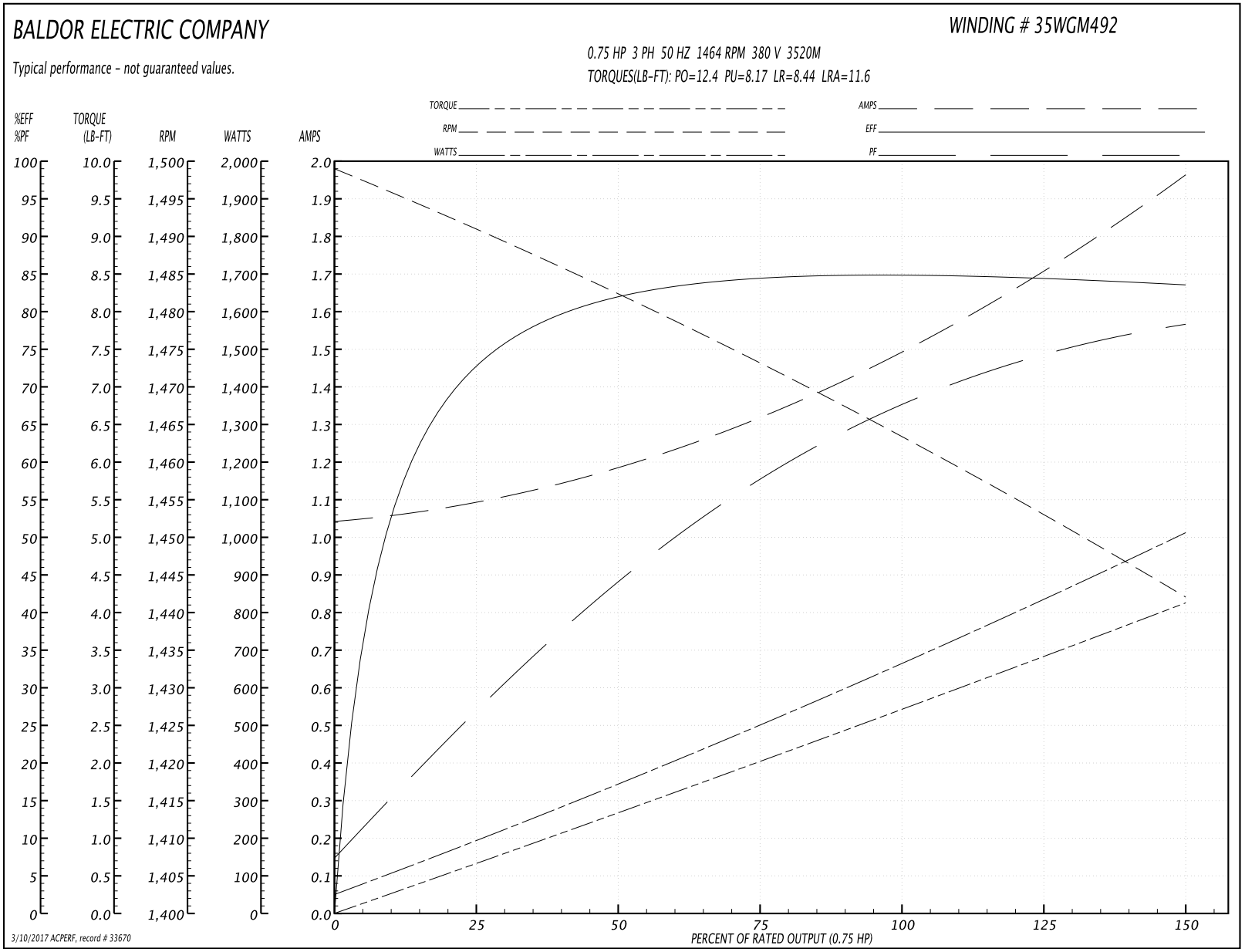

35E356

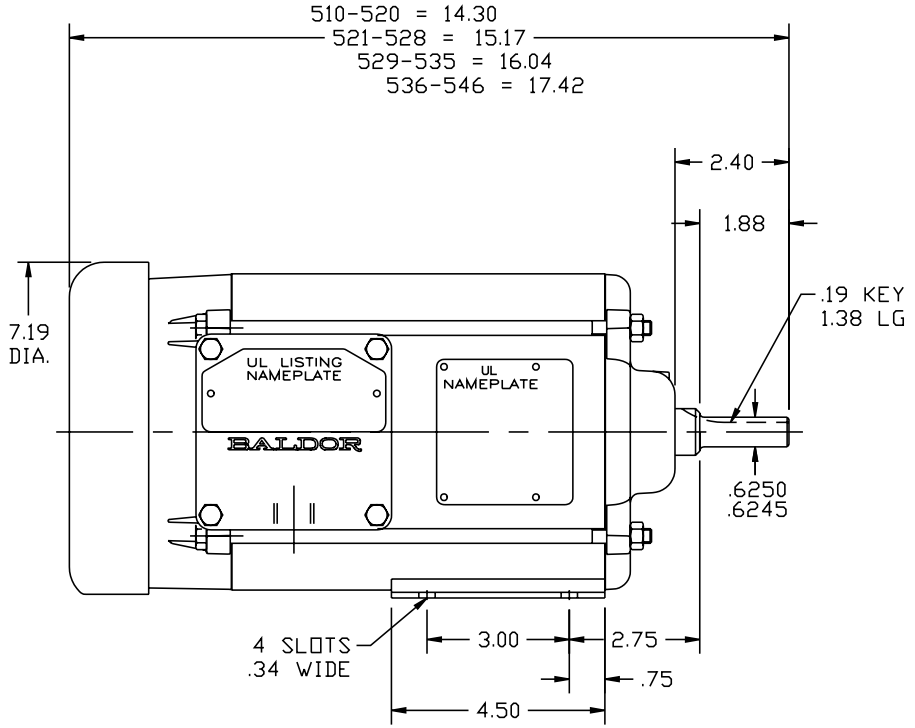

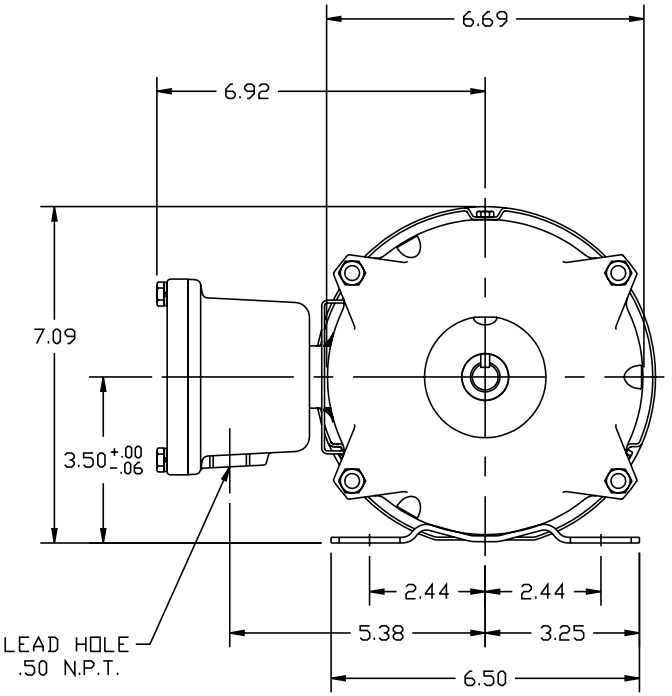

UL CLASS I - GROUP D - CLASS II - GROUPS F & G

CUST. NAME	CUST. P.O.	CERTIFIED BY	MODEL	INSUL	AMB
H.P.	MTG	TYPE	R.P.M.	VOLTS	ENCL	PHASE	FREQ	FRAME
REMARKS:								
REV: E	UPDATED TO ACAD							

BALDOR ELECTRIC Co.

35E356	SCALE: .3	BY: PGM	REVISED: 09/03/93
	FILE: AAA00005335		TDR: 0045288

STD HORZ NEMA 56 TEFC X35M CL I-GP D-CL II-GP F&G

35E356

CD0005

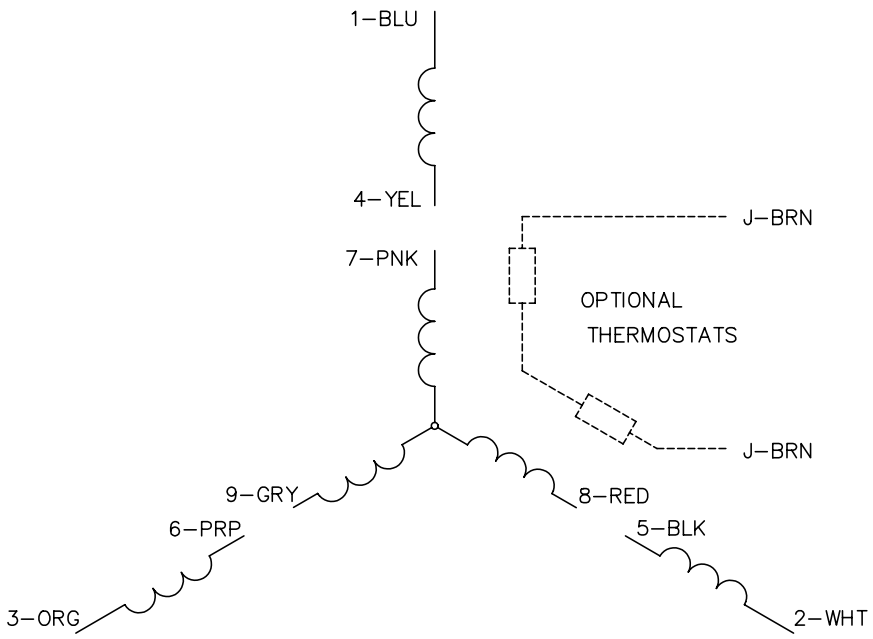

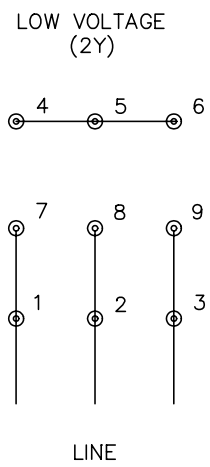

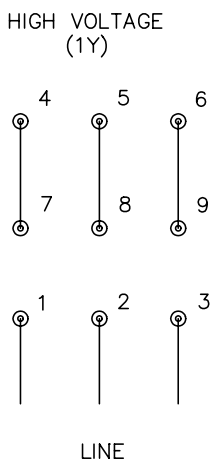

NOTES:

1. INTERCHANGE ANY TWO LINE LEADS TO REVERSE ROTATION.
2. OPTIONAL THERMOSTATS ARE PROVIDED WHEN SPECIFIED.
3. ACTUAL NUMBER OF INTERNAL PARALLEL CIRCUITS MAY BE A MULTIPLE OF THOSE SHOWN ABOVE.
4. LEAD COLORS ARE OPTIONAL. LEADS MUST ALWAYS BE NUMBERED AS SHOWN.

REV. DESC: REVISE TO SHOW OPTIONAL COLORS			
REV. LTR: E	BY: JLP	REVISED: 01/19/99 10:15	TDR: 0171435
CD0005		FILE: AAA00005140	MDL: –
		MTL: –	

BALDOR ELECTRIC Co.

3PH, DV, 9 LEADS

CD0005