Larson Electronics LLC **www.LarsonElectronics.com** **sales@larsonelectronics.com**
9419 E US HWY 175, Kemp, TX 75143 - P: (800) 369-6671 - F: (903) 498-3364

EPL-HB-144W-LED-PND

INTRODUCTION

This High Bay Light is designed for illumination of industrial locations. It uses the latest in solid state lighting technology for long life, low maintenance, and high efficiency.

The unique optical design focuses light downward to where it is needed, giving improved efficiency over a conventional HID luminaire.

An internal, universal input, power-factor-corrected switch-mode supply allows it to be used from any nominal 100V-277V, 50/60Hz AC supply without any variation in light output.

NOTE: Save these instructions for future reference.

INSTALLATION

WARNING: To avoid the risk of fire, explosion, or electric shock, this product should be installed, inspected, and maintained by a qualified electrician only, in accordance with all applicable electrical codes.

WARNING: TO AVOID ELECTRIC SHOCK

- Be certain electrical power is OFF before and during installation and maintenance.
- Luminaire must be connected to a wiring system with an equipment-grounding conductor.

WARNING: TO AVOID EXPLOSION

- Make sure the supply voltage is within the luminaries' voltage rating.
- Ensure the marked T rating is less than the ignition temperature of the Hazardous Atmosphere.
- Do not operate in ambient temperatures above those indicated on the luminaire nameplate.
- Do not operate if the lens is cracked or damaged. All fasteners should be properly seated.

For supply connections use wire rated for at least 110°C

Recommended mounting height: 25-40 Feet

PENDENT MOUNT INSTALLATION

For maximum long term reliability and light output, the light must be installed in free air.

- The high bay fixture design incorporates an over-temperature control circuit that reduces input power should internal temperatures reach a maximum level. In this event, light output may be reduced.

The high bay fixture is threaded for 3/4" NPT in order to be assembled to conduit.

- The necks of these fixtures are filled with Chico in accordance with the C1D1 explosion proof regulation (Chico cannot be seen from 3/4" NPT entrance). Plan your Chico fittings and conduit accordingly.
- Calculate and measure required conduit length.
- Feed the power cord (max length of power cord = 10') through the conduit and into the junction box.
- Attach the fixture to the conduit using conductive pipe sealant.
- Tighten ¼ - 20 anti-rotational screw in order to secure the fixture to the conduit.

Connect power cable conductors as follows:

- Green to Safety Ground
- White to Neutral
- Black to Live

Restore power and verify operation.

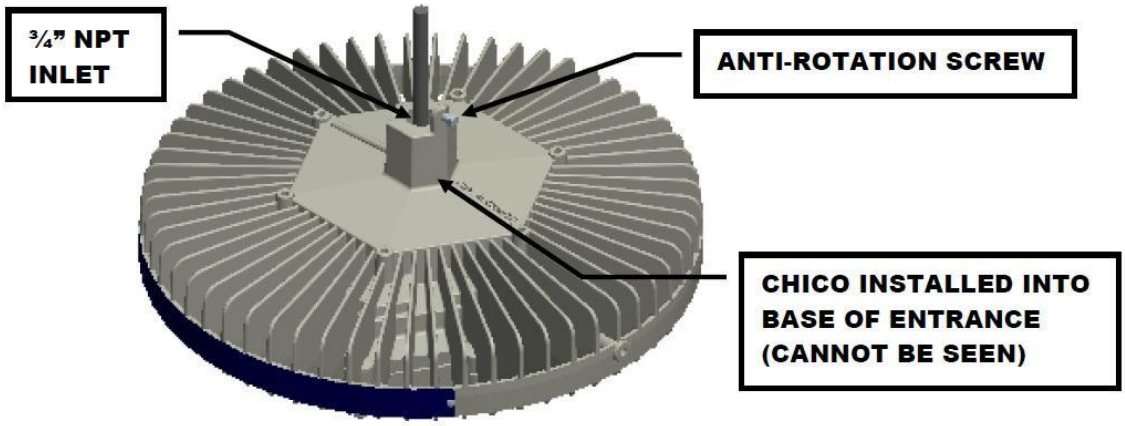

INTERFACING TO AN OCCUPANCY SENSOR

Magnalight's High Bay fixture is ideally suited for control by an occupancy sensor in order to maximize energy savings based on its instant-on behavior and low power consumption. Instructions for connecting the High Bay fixture to an occupancy sensor are listed below**.**

WARNING: To be installed and/or used in accordance with appropriate electrical codes and regulations.

WARNING: Controlling a load in excess of the specified ratings of the occupancy sensor could damage the unit and pose risk of fire, electric shock, personal injury, or death. Check load ratings to determine the unit's suitability for your application.

NOTE: See occupancy sensor installation instructions for additional information.

Larson Electronics LLC www.LarsonElectronics.com sales@larsonelectronics.com
9419 E US HWY 175, Kemp, TX 75143 - P: (800) 369-6671 - F: (903) 498-3364

WARNING: To avoid fire, shock or death, turn off power at circuit breaker or fuse and test that the power is off before wiring.

1. Install occupancy sensor as per sensor instructions to provide desired coverage of area.
2. Connect luminaire wires per wiring diagram as follows: Black lead to load of the occupancy sensor, White lead to the line (neutral), Green lead to earth ground. Multiple fixtures may be connected to a sensor, as long as the rated load of the sensor is not exceeded.
3. Restore power at circuit breaker or fuse.
4. Verify operation of system. If the light will not turn on, check the operation of the fixture and sensor individually, and check that the wiring is done correctly. If the light will not turn off or turns off and on quickly, see the sensor's installation instructions for further guidance.

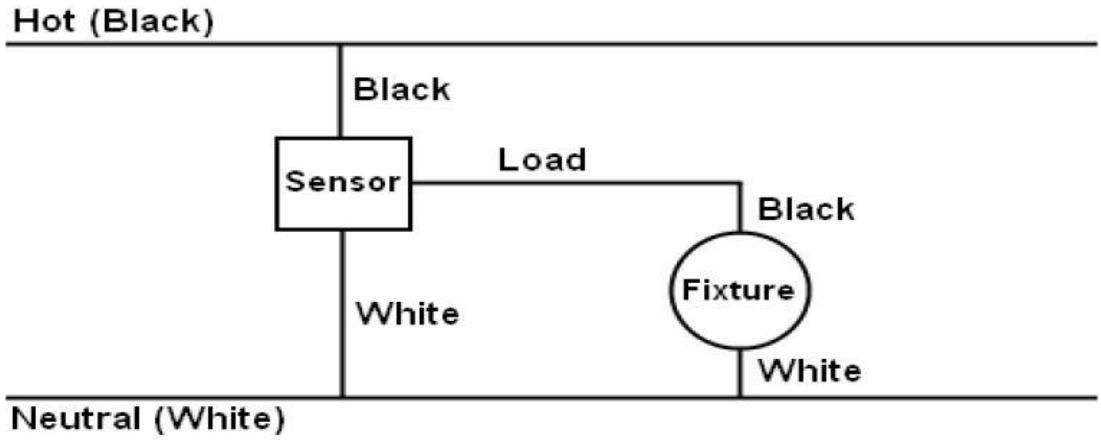

MAINTENANCE

WARNING: To avoid personal injury, disconnect power to the light and allow the unit to cool down before performing maintenance.

WARNING: No user serviceable parts inside of fixture. Risk of electric shock. Removal of the lens will avoid warranty.

- Perform visual, mechanical and electrical inspections on a regular basis. We recommend routine checks to be made on a yearly basis. Frequency of use and environment should determine this. It is recommended to follow an Electrical Preventive Maintenance Program as described in NFPA 70B: Recommended Practice for Electrical Equipment.
- The lens should be cleaned periodically as needed to ensure continued photometric performance. Clean the lens with a damp, non-abrasive, lint-free cloth. If not sufficient, use mild soap or a liquid cleaner.
- Inspect the cooling fins on the luminaire to ensure that they are free of any obstructions or contamination (i.e. excessive dust build-up). Clean with a non-abrasive cloth if needed.
- Do not operate if the lens is cracked or damaged. All fasteners should be properly seated.

Larson Electronics LLC www.LarsonElectronics.com sales@larsonelectronics.com
9419 E US HWY 175, Kemp, TX 75143 - P: (800) 369-6671 - F: (903) 498-3364

GENERAL INSRUCTIONS

1. Turn off power
2. Use only copper wire
3. Seal all unused outlets w/ plugs (provided)
4. Use Teflon tape on all plugs, threaded fittings, and threaded locker on locking screw to ensure 4X rating.
5. Installation and wiring must comply with local electrical codes.
6. Attach system ground wire under head of green screw in box.

INSTALLATION INSTRUCTIONS

1. Mount box to surface, or pole (1/4-20 hardware not provided)
2. Install ¾" NPT fittings or conduit using Teflon tape on threads.
3. Pull wires into box.
4. Install device(s) per device instructions.
5. Thread cover onto box; ensure O-ring is present and not spilling out of intended groove.