120 Watt LED Pole Mount Light Fixture
INSTALLATION & OPERATION

Do not attempt installation until you are familiar with all warnings, precautions, and procedures outlined within this instruction sheet.

WARNING!

- TO PREVENT RISK OF ELECTRICAL SHOCK DEACTIVATE/DISCONNECT POWER SUPPLY BEFORE INSTALLING OR MAINTAINING FIXTURE.
- FOR SAFETY AND WARRANTY CONCERNS, THIS FIXTURE MUST BE INSTALLED BY A QUALIFIED ELECTRICIAN IN STRICT ACCORDANCE WITH THE NATIONAL ELECTRICAL CODE (NEC) AND ANY STATE OR LOCAL REQUIREMENTS.
- VERIFY THAT THE SUPPLY VOLTAGE AGREES WITH FIXTURE RATING AS INDICATED ON NAMEPLATE. ALL LOCAL AND NATIONAL ELECTRICAL/BUILDING CODES MUST BE FOLLOWED WHEN INSTALLING THIS LIGHTING FIXTURE. FOR CODE INTERPRETATION, CONSULT YOUR LOCAL AUTHORITY. PRODUCT MUST BE USED ONLY WITH LENS INTACT. DO NOT USE IF LENS IS CRACKED OR DAMAGED.
- ANY ALTERATION OR MODIFICATION OF THIS PRODUCT IS EXPRESSLY FORBIDDEN AS IT MAY CAUSE SERIOUS PERSONAL INJURY, DEATH, PROPERTY DAMAGE AND/OR PRDOUCT MALFUNCTION.
- TO PREVENT PRODUCT MALFUNCTION AND/OR ELECTRICAL SHOCK THIS PRODUCT MUST BE PROPERLY GROUNDED.
- ALL WIRING CONNECTIONS SHOULD BE CAPPED WITH UL APPROVED WIRE CONNECTORS.
- ALLOW FIXTURE TO COOL BEFORE HANDLING. DO NOT TOUCH ENCLOSURE OR LIGHT SOURCE.
- THIS LUMINAIRE IS DESIGNED TO OPERATE IN AMBIENT TEMPERATURES RANGING FROM -40°C TO 45°C.
- THIS PRODUCT MUST BE INSTALLED IN ACCORDANCE WITH THE APPLICABLE INSTALLATION CODE BY A PERSON FAMILIAR WITH THE CONSTRUCTION AND OPERATION OF THE PRODUCT AND HAZARDS INVOLVED.

INSTALLATION

We strongly recommend that only a licensed electrician install this product. Disconnect power supply before installing and maintaining fixture.

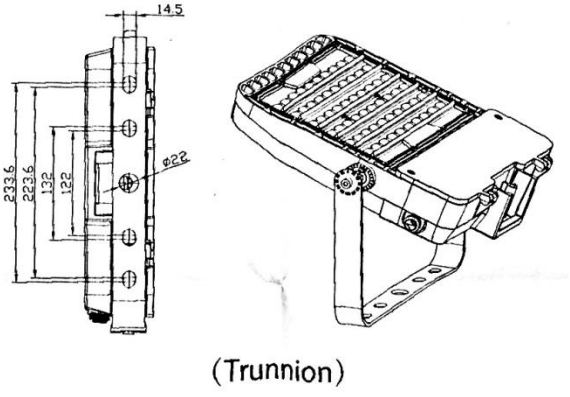



Mounting

1. Slip the pole mount fixture over the top of the pole you wish to mount onto.
2. Rotate light to desired aim and tighten the set screw to hold in place.
3. Complete electrical connections via flying leads to compatible power source outputting the correct voltage.

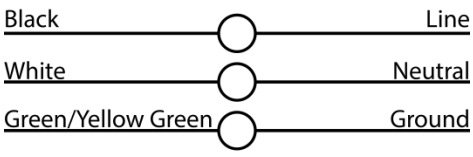

NOTE: *Check label on light fixture for proper voltage! Connecting light to voltage outside of this range will cause damage to fixture and void warranty.*

Refer to wiring diagram for proper connections.

MAINTENANCE:

This LED light provides low maintenance service with no bulbs to change. Electrical and mechanical inspection of all components must be performed on a regularly scheduled basic, determined by the environment and frequency of use. It is recommended that inspection be performed a minimum of once a year.

1. Perform visual, electrical, and mechanical inspections on a regular basis. The environment and frequency of use should determine this. However, it is recommended that checks be made at least once a year. We recommend an Electrical Preventive Maintenance Program as described in the National Fire Protection Association Bulletin NFPA No. 70B: Recommended Practice For Electrical Equipment Maintenance (www.nfpa.org).
2. Visually check for undue heating evidenced by discoloration of wires or other components, damaged parts, or leakage evidenced by water or corrosion in the interior.
3. Electrically check to make sure that all connections are clean and tight.
4. Mechanically check that all parts are properly assembled.

Clean surfaces with a mild soap and water. Do not use abrasive materials such as scouring pads or powders, steel wool or abrasive paper.

Unauthorized modification may impair the function and/or safety of the light fixture and could affect the life of the equipment. Always check damaged or worn out parts before using the unit.

TROUBLESHOOTING

Most failures experienced are due to improper installation.
Therefore, most failure issues can be corrected by checking that:

- Line voltage at the fixture is correct. Refer to wiring directions.
- Fixture is properly grounded.
- Photocell is functioning properly (if applicable).

Should further information not covered by these instructions be required, please contact Larson Electronics at 1-800-369-6671 or sales@larsonelectronics.com for further assistance.

Please visit LarsonElectronics.com for **Warranty** and **Return** information.