LARSON ELECTRONICS®

**45 Amp Charge Controller - 12-48V - PWM - Charge Batteries from Solar Panels**

# Installation, Operation and Maintenance Manual




.....

**Solar Battery Charging**

.....

**Load Control**

.....

**Diversion Control**

This page inside front
COVER 2
(Please do not print this copy)



# Table of Contents

Important Safety Instructions ..... 1

1.0 Description ..... 7
- 1.1 Versions and Ratings ..... 7
- 1.2 Operating Modes ..... 7
- 1.3 Adjustability ..... 8
- 1.4 General Use ..... 8
- 1.5 Safety and Regulatory Information ..... 10
- 1.6 Optional Accessories ..... 11

2.0 Installation ..... 12
- 2.1 General Information ..... 12
- 2.2 Installation Overview ..... 13
- 2.3 Installation Steps ..... 14
  - 1. Remove the Cover ..... 15
  - 2. Mounting ..... 15
  - 3. Adjust DIP Switches ..... 16
  - 4. Remote Temperature Sensor ..... 21
  - 5. Battery Voltage Sense ..... 22
  - 6. System Wiring and Power-up ..... 23
  - 7. RS-232 Adjustments ..... 26
  - 8. Finish Installation ..... 26

3.0 Operation ..... 27
- 3.1 Operator's Tasks ..... 27
- 3.2 Push-button ..... 27
- 3.3 LED Indications ..... 28
- 3.4 Protections and Fault Recovery ..... 29
- 3.5 Data-Logging ..... 32
- 3.6 Inspection and Maintenance ..... 32

4.0 Solar Battery Charging ..... 34
- 4.1 PWM Battery Charging ..... 34
  - 4.1.1 Four Stages of Solar Charging ..... 34
  - 4.1.2 Battery Charging Notes ..... 34
- 4.2 Standard Battery Charging Programs ..... 35
- 4.3 Temperature Effects & Battery Voltage Sense ..... 36
  - 4.3.1 Remote Temperature Sensor (RTS) ..... 36
  - 4.3.2 Battery Voltage Sense ..... 37
- 4.4 Equalization ..... 38
  - 4.4.1 Standard Equalization Programs ..... 39
  - 4.4.2 Typical qualizations ..... 39
  - 4.4.3 Preparation for equalization ..... 40
  - 4.4.4 When to Equalize ..... 40
  - 4.4.5 Equalize a Sealed Battery? ..... 40
- 4.5 Float ..... 41

*(continued)*

5.0 Load & Lighting Control ..... **42**
5.1 General Load & Lighting Control Notes.....42
5.1.1 Inductive Loads.....42
5.1.2 Parallel charge controllers.....42
5.1.3 Reverse Polarity.....42
5.2 Load Control Settings..... 42
5.3 LVD Warning.....44

6.0 Diversion Charge Control ..... **44**
6.1 Diversion Charge Control..... 44
6.2 Diversion Current Ratings ..... 45
6.3 Standard Diversion Battery Charging Programs..... 45
6.3.1 Battery Charging References.....46
6.4 Selecting the Diversion Load.....47
6.4.1 Suitable Loads for Diversion.....47
6.4.2 Defintion of Terms.....47
6.4.3 Load Power Ratings.....48
6.4.4 Maximum Diversion Load.....48
6.4.5 Minimum Diversion Load.....49
6.5 NEC Requirements ..... 50
6.5.1 Second Independent Means.....50
6.5.2 150 Percent Rating..... 50
6.6 Additional Information.....50

7.0 Custom Settings with PC Software.....**51**
7.1 Connection to a Computer.....51
7.2 Using the PC Software.....51
7.3 Changing Set-points.....52
7.4 Finish.....52

8.0 Self-Test / Diagnostics.....53
8.1 General Troublshooting.....53
8.2 Troubleshooting Solar Charging..... 54
8.3 Troubleshooting Load Control..... 54
8.4 Troubleshooting Diversion Control..... .....54

9.0 Battery Information (reference)..... **55**
9.1 Sealed Batteries.....55
9.2 Flooded Batteries..... 56
9.3 L-16 Cells ..... 57

10.0 Warranty.....**58**

11.0 Specifications.....**59**

Appendix 1 - Load and Lighting Control DIP Switch Settings.....**61**
Appendix 2 - Diversion Charge Control DIP SwitchSettings.....**66**
Appendix 3 - LED Indications..... **70**

12.0 Certifications..... **73**



# IMPORTANT SAFETY INSTRUCTIONS

## SAVE THESE INSTRUCTIONS.

This manual contains important safety, installation, operating and maintenance instructions for the charge controller

The following symbols are used throughout this manual to indicate potentially dangerous conditions or mark important safety instructions:

***WARNING:*** *Indicates a potentially dangerous condition. Use extreme caution when performing this task.*

***CAUTION:*** *Indicates a critical procedure for safe and proper operation of the controller.*

***NOTE:*** *Indicates a procedure or function that is important to the safe and proper operation of the controller.*

**CONSIGNES IMPORTANTES DE SÉCURITÉ**

**CONSERVEZ CES INSTRUCTIONS.**

Ce manuel contient des instructions importantes de sécurité, d'installations et d'utilisation du contrôleur solaire. charge controller. Les symboles suivants sont utilisés dans ce manuel pour indiquer des conditions potentiellement dangereuses ou des consignes importantes de sécurité.

***AVERTISSEMENT:*** *Indique une condition potentiellement dangereuse. Faites preuve dûne prudence extr° me lors de la r®alisation de cette t©che.*

***PRUDENCE:*** *Indique une proc®dure critique pour lûutilisation s¾e et correcte du contr¹ leur.*

***REMARQUE:*** *Indique une proc®dure ou fonction importante pour lûutilisation s¾e et correcte du contr¹ leur.*

## Safety Information

- Read all of the instructions and cautions in the manual before beginning installation.
- There are no user serviceable parts inside the charge controller. Do not disassemble or attempt to repair the controller.

*continued...*

***WARNING:*** *RISK OF ELECTRICAL SHOCK.*

*NO POWER OR ACCESSORY TERMINALS ARE ELECTRICALLY ISOLATED FROM DC INPUT, AND MAY BE ENERGIZED WITH HAZARDOUS SOLAR VOLTAGE. UNDER CERTAIN FAULT CONDITIONS, BATTERY COULD BECOME OVER-CHARGED. TEST BETWEEN ALL TERMINALS AND GROUND BEFORE TOUCHING.*

- External solar and battery disconnects are required.
- Disconnect all sources of power to the controller before installing or adjusting the charge controller
- There are no fuses or disconnects inside the charge controller Do not attempt to repair.

## Informations de Sécurité

- Lisez toutes les instructions et les avertissements igurant dans le manuel avant de commencer l'installation.
- Le charge controller ne contient aucune pièce réparable par l'utilisateur. Ne dé-montez pas ni ne tentez de réparer le contrôleur.

***AVERTISSEMENT:*** *RISQUE DE CHOC ÉLECTRIQUE. NON ALIMENTATION OU AUX BORNES D'ACCESSOIRES SONT ISOLÉS ÉLECTRIQUEMENT DE L'ENTRÉE DE C.C ET DOIT ÊTRE ALIMENTÉS À UNE TENSION DANGEREUSE SOLAIRE. SOUS CERTAINES CONDITIONS DE DÉFAILLANCE, LA BATTERIE POURRAIT DEVENIR TROP CHARGÉE. TEST ENTRE TOUTES LES BORNES ET LA MASSE AVANT DE TOUCHER.*

- External solaire et la batterie se déconnecte sont nécessaires.
- Déconnectez toutes les sources d'alimentation du contrôleur avant d'installer ou de régler le charge controller.
- Le charge controller MPPT ne contient aucun fusible ou interrupteur. Ne tentez pas de réparer.
- Installez des fusibles/coupe-circuits externes selon le besoin.

## Installation Safety Precautions

***WARNING:*** *This unit is not provided with a GFDI device. This charge controller must be used with an external GFDI device as required by the Article 690 of the National Electrical Code for the installation location.*

- Mount the charge controller indoors. Prevent exposure to the elements and do not allow water to enter the controller.
- Install the charge controller in a location that prevents casual contact. The charge controller heatsink can become very hot during operation.
- Use insulated tools when working with batteries.
- Avoid wearing jewelry during installation.



- The battery bank must be comprised of batteries of same type, make, and age.
- IEC 62109 certified for use in negative ground or floating systems only
- Do not smoke near the battery bank.
- Power connections must remain tight to avoid excessive heating from a loose connection.
- Use properly sized conductors and circuit interrupters.
- The grounding terminal is located in the wiring compartment and is identified by the symbol below:



Ground Symbol

- This charge controller is to be connected to DC circuits only. These DC connections are identified by the symbol below:



Direct Current Symbol

The charge controller must be installed by a quali ied technician in accordance with the electrical regulations of the country where the product is installed. A means of disconnecting all power supply poles must be provided. These disconnects must be incorporated in the ixed wiring.

A permanent, reliable earth ground must be established with connection to the charge controllerwiring compartment ground terminal.

The grounding conductor must be secured against any accidental detachment. The knock-outs in the charge controller wiring compartment must protect wires with conduit or rubber rings.

## Précautions de Sécurité D'installation

***AVERTISSEMENT:*** *L'appareil n'est pas fourni avec un dispositif GFDI. Ce contrôleur de charge doit être utilisé avec un dispositif GFDI externe tel que requis par l'Article 690 du Code électrique national de l'emplacement de l'installation.*

- Montez le charge controller à l'intérieur. Empêchez l'exposition aux éléments et la pénétration d'eau dans le contrôleur.
- Installez le MPPT ProStar dans un endroit qui empêche le contact occasionnel. Le dissipateur de chaleur charge controller peut devenir très chaud pendant

le fonctionnement.

- Utilisez des outils isolés pour travailler avec les batteries.
- Évitez le port de bijoux pendant l'installation.
- Le groupe de batteries doit être constitué de batteries du même type, fabricant et âge.
- UL/IEC 62109 certifié pour utilisation au négatif à la masse ou les systèmes flottants seulement.
- Ne fumez pas à proximité du groupe de batteries.
- Les connexions d'alimentation doivent rester serrées pour éviter une surchauffe excessive d'une connexion desserrée.
- Utilisez des conducteurs et des coupe-circuits de dimensions adaptées.
- La borne de mise à la terre se trouve dans le compartiment de câblage et est identifiée par le symbole ci-dessous:

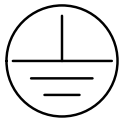

- Ces connexions CC sont identifiées par le symbole ci-dessous:



***WARNING:*** *A battery can present a risk of electrical shock or burn from large amounts of short-circuit current, fire, or explosion from vented gases. Observe proper precautions.*

***AVERTISSEMENT:*** *Une batterie peut présenter a risque de choc électrique ou de brûlure de grandes quantités de court-circuit curlouer, incendie ou explosion de ventilé gaz. Observer précautions appropriées.*

***WARNING: Risk of Explosion.***
*Proper disposal of batteries is required. Do not dispose of batteries in fire. Refer to local regulations or codes for requirements.*

***AVERTISSEMENT: Risque d'Explosion.***
*Au rebut des piles est nécessaire. Ne pas jeter les piles dans le feu. Se référer aux réglementations locales ou des codes pour les exigences.*

***CAUTION:*** *When replacing batteries, use properly specified number, sizes, types, and ratings based on application and system design.*



***PRUDENCE:*** *Lorsque le remplacement des piles, utilisez correctement nombre spécifié, tailles, types et les évaluations basées sur conception de système et d'application.*

***CAUTION:*** *Do not open or mutilate batteries. Released electrolyte is harmful to skin, and may be toxic.*

***PRUDENCE:*** *Ne pas ouvrir ou mutiler les piles. L'électrolyte est nocif pour la peau et peut être toxique.*

• Servicing of batteries should be performed, or supervised, by personnel knowledgeable about batteries, and the proper safety precautions.

• Be very careful when working with large lead-acid batteries. Wear eye protection and have fresh water available in case there is contact with the battery acid.

• Remove watches, rings, jewelry and other metal objects before working with batteries.

• Wear rubber gloves and boots

• Use tools with insulated handles and avoid placing tools or metal objects on top of batteries.

• Disconnect charging source prior to connecting or disconnecting battery terminals.

• Determine if battery is inadvertently grounded. If so, remove the source of contact with ground. Contact with any part of a grounded battery can result in electrical shock. The likelihood of such a shock can be reduced if battery grounds are removed during installation and maintenance (applicable to equipment and remote battery supplies not having a grounded supply circuit).

• Carefully read the battery manufacturer's instructions before installing / connecting to, or removing batteries from, the charge controller.

• Be very careful not to short circuit the cables connected to the battery.

• Have someone nearby to assist in case of an accident.

• Explosive battery gases can be present during charging. Be certain there is enough ventilation to release the gases.

• Never smoke in the battery area.

• If battery acid comes into contact with the skin, wash with soap and water. If the acid contacts the eye, flood with fresh water and get medical attention.

• Be sure the battery electrolyte level is correct before starting charging. Do not attempt to charge a frozen battery.

• Recycle the battery when it is replaced.

• Entretien des batteries devrait être effectué ou supervisé, par un personnel bien informé sur les piles et les précautions de sécurité appropriées.

• Soyez très prudent quand vous travaillez avec des grandes batteries au plomb. Portez des lunettes de protection et ayez de l'eau fraîche à disposition en cas de contact avec l'électrolyte.

• Enlevez les montres, bagues, bijoux et autres objets mé talliques avant de travailler avec des piles.

• Porter des bottes et des gants de caoutchouc

• Utiliser des outils avec poignées isolantes et évitez de placer des outils ou des objets métalliques sur le dessus de batteries.

• Débrancher la source de charge avant de brancher ou dis reliant les bornes de la batterie.

• Utilisez des outils isolés et évitez de placer des objets

métalliques dans la zone de travail.

• Déterminer si batterie repose par inadvertance. Dans l'affirmative, supprimer la source du contact avec le sol. Contact avec n'importe quelle partie d'une batterie mise à la terre peut entraîner un choc électrique. La probabilité d'un tel choc peut être réduite si des motifs de batterie sont supprimés pendant l'installation et maintentretien (applicable à l'équipement et les fournitures de pile de la

télécommande n'ayant ne pas un circuit d'alimentation mise à la terre).

• Lisez attentivement les instructions du fabricant de la batterie avant d'installer / connexion à ou retrait des batteries du charge controller.

• Veillez à ne pas court-circuiter les câbles connectés à la batterie.

• Ayez une personne à proximité qui puisse aider en cas d'accident.

• Des gaz explosifs de batterie peuvent être présents pendant la charge.

Assurez-vous qu'une ventilation suffisante évacue les gaz.

- Ne fumez jamais dans la zone des batteries
- En cas de contact de l'électrolyte avec la peau, lavez avec du savon et de l'eau. En cas de contact de l'électrolyte avec les yeux, rincez abondamment avec de l'eau fraîche et consultez un médecin.
- Assurez-vous que le niveau d'électrolyte de la batterie est correct avant de commencer la charge. Ne tentez pas de charger une batterie gelée.
- Recyclez la batterie quand elle est remplacée.



# 1.0 Description



The charge controller is a technically advanced solar system controller. There are three operating modes programmed into each charge controller. This manual describes solar battery charging, and specific load control or diversion charge control instructions are inserted where required.

This manual will help you to become familiar with the charge controller's features and capabilities. Some of these follow:

- ETL Listed (UL 1741) and cETL Listed (CSA-C22.2 No. 107.1)
- TUV Listed (IEC 62109)
- Complies with the US National Electrical Code
- Complies with the Canadian Electrical Code
- Complies with EMC and LVD standards for CE marking
- Rated for 12, 24, 48 volt systems, and 45 or 60 amps current
- Fully protected with automatic and manual recovery
- Seven standard charging or load programs selected with DIP switches
- Adjustability by means of an RS-232 connection with PC software
- Continuous self-testing with fault notification
- LED indications and push-button functions
- Terminals sized for 35mm$^2$ (#2 AWG) wire
- Includes battery voltage sense terminals
- Digital meter options (mounted to charge controller or remote)
- Optional remote battery temperature sensor
- 5-year warranty (see Section 10.0)

## 1.1 Versions and Ratings

There are two standard versions of charge controller:

Charge Controller -45:
Rated for maximum 45 amps continuous current
(solar, load or diversion load)
Rated for 12, 24, 48 Vdc systems

Charge Controller 60:
Rated for maximum 60 amps continuous current
(solar, load or diversion load) Rated for 12, 24, 48 Vdc systems

Charge Controller-60M:
Rated for maximum 60 amps continuous current
(solar, load or diversion load) Rated for 12, 24, 48 Vdc systems
Includes on-board meter display

## 1.2 Operating Modes

There are three distinct and independent operating modes programmed into each charge controller. Only one mode of operation can be selected for an individual charge controller. If a system requires a charging controller and a load controller, two charge controller must be used.

## 1.3 Adjustibility

Eight DIP switches permit the following parameters to be adjusted at the installation site:

| DIP switch | Solar Battery Charging |
|---|---|
| 1 | Battery charge control mode |
| 2-3 | Select battery voltage |
| 4-6 | Standard battery charging programs |
| 7 | Manual or automatic equalization |
| 8 | PWM charging or on-off charging |

| DIP switch | Load Control |
|---|---|
| 1 | DC load control mode |
| 2-3 | Select battery voltage |
| 4-6 | Standard low voltage disconnects and reconnects |
| 7 | not used for load control |
| 8 | not used for load control |

| DIP switch | Diversion Charge Control |
|---|---|
| 1 | DC load control mode |
| 2-3 | Select battery voltage |
| 4-6 | Standard diversion charge control programs |
| 7 | Select diversion charge control mode |
| 8 | Manual or automatic equalization |

In addition to the DIP switches, the charge controller provides for additional adjustments using a PC program. An RS-232 connection between the charge controller and a personal computer will enable extensive adjustments using PC software.

## 1.4 General Use

NOTE: This manual describes solar battery charging. Specific instructions for the load control and diversion charge control modes are provided as notes throughout this manual.

REMARQUE : Ce manuel décrit la charge de batteries solaires. Des instructions spécifiques aux modes de contrôle du chargement et de contrôle de la charge de diversion figurent en tant que remarques dans ce manuel.

The charge controller is suitable for a wide range of solar applications including homes, telecom and industrial power needs.

charge controller are configured for negative ground systems. There are no parts in the controller's negative leg. The enclosure can be grounded using the ground terminal in the wiring compartment.

The charge controller is protected from faults electronically with automatic recovery. There are no fuses or mechanical parts inside the charge controller to reset or change.

Solar overloads up to 130% of rated current will be tapered down instead of disconnecting the solar. Over-temperature conditions will also taper the solar input to lower levels to avoid a disconnect.

The NEC requires overcurrent protection externally in the system (see Section 2.3 step 6). There are no system disconnects inside the charge controller enclosure.

Any number of charge controllers can be connected in parallel to increase solar charging current. charge controllers can be paralleled ONLY in the battery charging mode. DO NOT parallel charge controllers in the load mode, as this can damage the controller or load.

The charge controller enclosure is rated for indoor use. The controller is protected
by conformal coated circuit boards, stainless steel hardware, anodized aluminum, and a powder coated enclosure, but it is not rated for corrosive environments or water entry.

The construction of the charge controller is 100% solid state.

Battery charging is by a series PWM constant current charging, with bulk charging, PWM absorption, float and equalization stages.

The charge controller will accurately measure time over long intervals to manage events such as automatic equalizations or battery service notification.

Day and night conditions are detected by the charge controller, and no blocking diodes are used in the power path.

LEDs, a push-button, and optional digital meters provide both status information and various manual operations.

The date of manufacture can be found on the two bar code labels. One label is on the back of the charge controller, and the other is in the wiring compartment. The year and week of manufacture are the first four digits of the serial number. For example:

| year | week | serial # |
|---|---|---|
| 03 | 36 | 0087 |

## 1.5 Safety and Regulatory Information

NOTE: This section contains important information for safety and regulatory requirements.

REMARQUE : Cette section contient des informations importantes relatives à la sécurité et aux obligations réglementaires.

The charge controller controller is intended for installation by a qualified technician according to electrical rules of each country in which the product will be installed.

charge controller comply with the following EMC standards:

Immunity: EN 61000-4-3: 2006; EN 61000- 4-6: 2009
Emissions: CISPR 22: 2008
Safety: EN60335-1 and EN60335-2-29 (battery chargers)

A means shall be provided to ensure all pole disconnection from the power supply. This disconnection shall be incorporated in the fixed wiring.

Using the charge controller grounding terminal (in the wiring compartment), a permanent and reliable means for grounding shall be provided. The clamping of the earthing shall be secured against accidental loosening.

The entry openings to the charge controller wiring compartment shall be protected with conduit or with a bushing.

FCC requirements:
This device complies with Part 15 of the FCC rules. Operation is subject to the following two conditions: (1) This device may not cause harmful interference, and (2) this device must accept any interference received, including interference that may cause undesired operation.

Note: This equipment has been tested and found to comply with the limits for a Class B digital device, pursuant to Part 15 of the FCC rules. These limits are designed to provide reasonable protection against harmful interference in a residential installation. This equipment generates, uses, and can radiate radio frequency energy and, if not installed and used in accordance with the instruction manual, may cause harmful interference to radio communication. However, there is no guarantee that interference will not occur in a particular installation. If this equipment does cause harmful interference to radio or television reception, which can be determined by turning the equipment on and off, the user is encouraged to try to correct the interference by one or more of the following measures:

- Reorient or relocate the receiving antenna.
- Increase the separation between the equipment and receiver.
- Connect the equipment into an outlet on a circuit different from that to which the receiver is connected.
- Consult the dealer or an experienced radio/TV technician for help.

This Class B digital apparatus complies with Canadian ICES-003.

Cet appareil numerique de la classe B est conforme a la norme NMB-003 du Canada.



## 1.6 Optional Accessories

**Remote Temperature Sensor (RTS)**
I the temperature o the system battery varies more than 5˚C (9˚F during the year, temperature compensated charging should be considered. Because the battery's chemical reactions change with temperature, it can be important to adjust charging to account for the temperature effects. The RTS will measure the battery temperature, and the charge controller uses this input to adjust the charging as required.

The battery charging will be corrected for temperature as follows:

- 12 V battery – 0.030 Volts per ˚C (–0.017V per ˚F)
- 24 V battery – 0.060 Volts per ˚C (–0.033V per ˚F)
- 48 V battery – 0.120 Volts per ˚C (–0.067V per ˚F)

The RTS should be used only for battery charging and diversion control. Do not use the RTS for load control. The charging parameters that are adjusted for temperature include:

- PWM regulation
- Equalization
- Float
- High Voltage Disconnect

See Installation, Step 4, for connecting the RTS to the charge controller.

**Digital Meter Displays**
Two digital meters can be added to the charge controller at any time during or after installation. One version is mounted on the controller (charge controller-M), the other is suitable for remote locations (charge controller-RM). The manual for installation and operation of the meter displays is included with the meter.

The display is a 2x16 LCD meter with backlighting. Four push-buttons are used to scroll through the displays and to execute manual functions.

There are a series of display screens that provide information such as:

- operating information and data
- operating bar charts (voltage and current)
- alarms and faults
- diagnostics
- settings

In addition, there are various manual functions built into the meter. For example, the meter can be used to reset Ah data or start/stop equalizations.

One of 5 languages can be selected for the meter.

**Ethernet Communications Adapter (EMC-1)**
This product is an Ethernet gateway that provides web monitoring services, a Modbus TCP/IP server, and a local web page server. End users can collect information about their off-grid PV system remotely. One EMC-1 supports all products with MeterBus ports by bridging MODBUS TCP/IP requests to serve LiveView pages for each product.

**USB Communications Adapter (UMC-1)**
A modular unit that uses a USB-B plug, usually from a USB A-B computer cable, and an RJ-11 plug to connect with a controller's MeterBus port, for monitoring and programming using MSView PC software.

# 2.0 Installation

The installation instructions describe solar battery charging. Specific instructions for the load control and diversion modes are provided as notes.

## 2.1 General Information

The mounting location is important to the performance and operating life of the controller. The environment must be dry and protected as noted below. The controller may be installed in a ventilated enclosure with sealed batteries, but never in a sealed battery enclosure or with vented batteries.

If the solar array exceeds the current rating of the controller, multiple charge controlleras can be installed in parallel. Additional parallel controllers can also be added in the future. The load controllers cannot be used in parallel.

If solar charging and load control are both required, two separate controllers must be used.

Stranded wires to be connected to the terminals should be prepared first with e.g. clamped copper heads, etc. to avoid the possibility of one conductor free out of the connection screw, and possible contact with the metal enclosure.

***WARNING:*** *Solar and battery fuses or DC breakers are required in the system. These protection devices are external to the controller, and must be a maximum of 70 amps for the charge controller-45, and 90 amps for the charge controller-60/M.*

***AVERTISSEMENT:*** *Solaire et batterie fusibles ou disjoncteurs DC sont nécessaires dans le système. Ces dispositifs de protection sont externes au contrôleur, et doivent être un maximum de 70 ampères pour le charge controller-45, et 90 ampères pour le charge controller-60/M.*

***WARNING:*** *Installation must comply with all US National Electrical Code and Canadian Electrical Code requirements. Breakers and fuses may require lower ratings than referenced above, so as not to exceed any specific wire ampacity.*

***AVERTISSEMENT:*** *Installation doit être conforme à toutes les requirments US National Electrical Code et Code Canadien d'Electricité. Disjoncteurs et fusibles peuvent exiger des cotes inférieures que mentionnés ci-dessus de manière à ne pas pour dépasser n'importe quel fils particulier admissible.*

Maximum battery short-circuit current rating must be less than the interrupt current rating of the battery over-current protectiondevicereferenced above.



## 2.2 Installation Overview

The installation is straightforward, but it is important that each step is done correctly and safely. A mistake can lead to dangerous voltage and current levels. Be sure to carefully follow each instruction in Section 2.3 and observe all cautions and warnings.

The following diagrams provide an overview of the connections and the proper order.

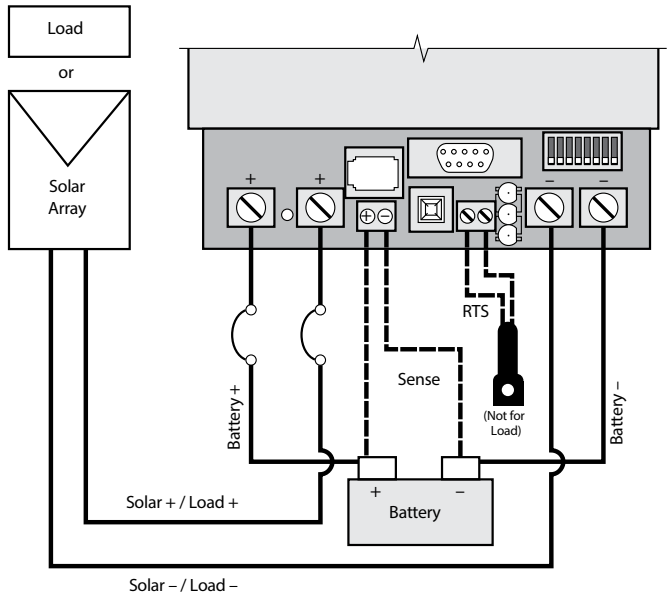


Figure 2.2a Installation Wiring for Solar Charging and Load Control

| Step | Solar Charging and Load Control |
|---|---|
| 1. | Remove the access cover |
| 2. | Mount the charge controller using the enclosed template. |
| 3. | Adjust the 8 switches in the DIP switch. Each switch must be in the correct position. |
| 4. | Attach the RTS if battery charging will be temperature compensated (not for load control). |
| 5. | Connect battery voltage sense wires (recommended). |
| 6. | Connect the battery power wires to the charge controller. Then connect the solar array wires (or load). |
| 7. | Connect a computer to the charge controller if making adjustments with PC software. |
| 8. | Replace the cover. |

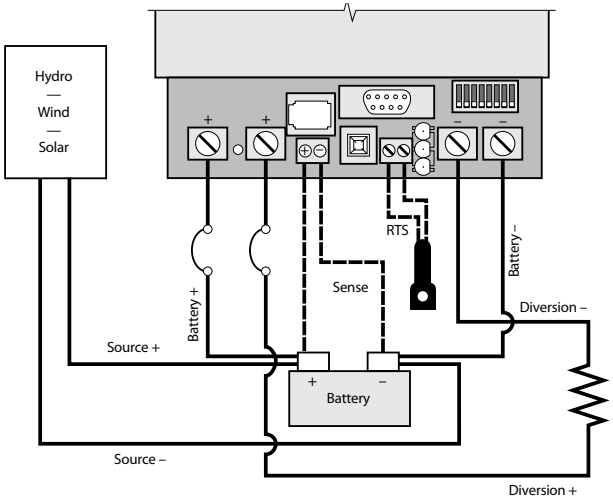


Figure 2.2b Installation Wiring for Diversion Charge Control

NOTE: charge controller negative terminals are common negative. Steps #3 and #6 are required for all installations. Steps #4, #5, and #7 are optional.

Step Diversion Charge Control

1. Remove the access cover
2. Mount the charge controller using the enclosed template.
3. Adjust the 8 switches in the DIP switch. Each switch must be in the correct position.
4. Attach the RTS if battery charging will be temperature compensated.
5. Connect battery voltage sense wires (recommended).
6. Connect the battery power wires to the charge controller. Then connect the diversion load wires.

Step Diversion Charge Control (continued)

7. Connect a computer to the charge controller if making adjustments with PC software.
8. Replace the cover.

## 2.3 Installation Steps

The charge controller must be installed properly and in accordance with the local and national electrical codes. It is also important that the installation be done safely, correctly and completely to realize all the benefits that the charge controller can provide for your solar system.

Refer to Sections 4.0 and 9.0 for information about the charge controller's standard battery charging programs and general charging needs for different battery types. Refer to Section 5.0 for load control information, and Section 6.0 for diversion.



Recommended tools:

- wire cutter
- torque wrench (to 50 in-lb)
- phillips screwdrivers
- slotted screw drivers
- wire stripper
- flashlight

Before starting the installation, review these safety notes:

- Do not exceed a battery voltage of 48V nominal (24 cells). Do not use a battery less than 12V (6 cells).
- Do not connect a solar input greater than a nominal 48V array for battery charging. Never exceed a Voc (open-circuit voltage) of 125V.
- Charge only 12, 24, or 48 volt lead-acid batteries when using the standard battery charging programs in the charge controller.
- Verify the nominal charging voltage is the same as the nominal battery voltage.
- Do not install a charge controller in a sealed compartment with batteries.
- Never open the charge controller access cover unless both the solar and battery power has been disconnected.
- Never allow the solar array to be connected to the charge controller with the battery disconnected. This can be a dangerous condition with high open-circuit solar voltages present at the terminals.

Follow the installation steps in order: #1 through #8

### Step 1 - Remove the Cover

Remove the 4 screws in the front cover. Lift the cover until the top edge clears the heat sink, and set it aside. If an LCD meter display is attached to the cover, disconnect the RJ-11 connector at the meter for access.

CAUTION: Do not remove the cover if power is present at any of the terminals. Verify that all power sources to the controller are disconnected.

PRUDENCE : N'enlevez pas le couvercle en cas de tension à une des bornes. Vérifiez que toutes les sources d'alimentation au contrôleur sont déconnectées.

### Step 2 - Mounting

Locate the charge controller on a wall protected from direct sun, high temperatures, and water. Do not install in a confined area where battery gasses can accumulate.

NOTE: When mounting the charge controller, make sure the air flow around the controller and heat sink is not obstructed. There should be open space above and below the heat sink, and at least 75 mm (3 inches) clearance around the heat sink to allow free air flow for cooling.

REMARQUE : Lors du montage du charge controller, assurez-vous que l'écoulement d'air autour du contrôleur et du puits de chaleur n'est pas obstrué. Un espace doit se trouver au-dessus et en dessous du puits de chaleur et un dégagement de 75 mm (3 po) doit exister autour du puits de chaleur pour permettre l'écoulement de l'air à des fins de refroidissement.

Before starting the installation, place the charge controller on the wall where it will be mounted and determine where the wires will enter the controller (bottom, side, back). Remove the appropriate knockouts before mounting the controller. The knockouts are sized for 1 inch and 1.25 inch conduit.

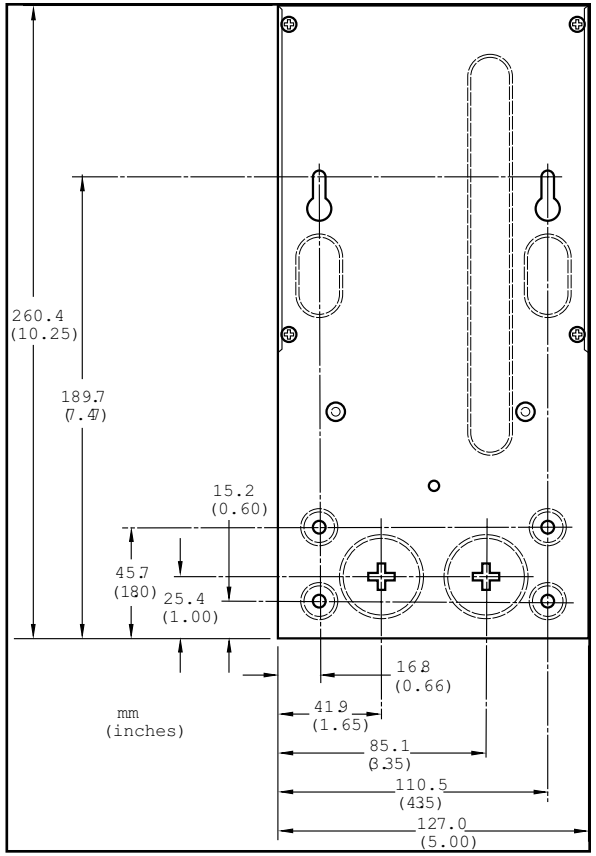


Figure 2.3 - Step 2 Mounting Dimensions

## Step 2 - Mounting (continued)

Refer to Figure 2.3. Use the template provided in the shipping carton for locating the mounting holes and for stripping the wires. Use two of the #10 screws provided for the two keyhole slots. Leave the screw heads protruding enough to lock inside the keyhole slots (about 3.8 mm / 0.150 inch). Mount the controller and pull it down to lock the screws into the slots. Use the remaining two screws to fasten the controller to the wall.

Provide for strain relief for the bottom knockouts if conduit will not be used. Avoid excessive pulling forces on the terminals from the wires.

## Step 3 - Adjust the DIP Switches

An 8-position DIP switch is used to set-up the controller for its intended use. All major functions can be set with the DIP switches. See Section 7.0 for additional custom settings using PC software.

NOTE: The instructions below are for solar battery charging. Refer to Appendix 1 for Load Control DIP switch settings, and Appendix 2 for Diversion Charge Control DIP switch settings.



REMARQUE : Les instructions ci-dessous concernent la charge de batteries solaires. Reportez-vous à l'Annexe 1 pour les réglages du commutateur DIP de contrôle de charge et à l'Annexe 2 pour les réglages du commutateur DIP de contrôle de charge de diversion.



The DIP switches are located behind the negative power terminals. Each switch is numbered. The solar battery charging functions that can be adjusted with the DIP switches follow:

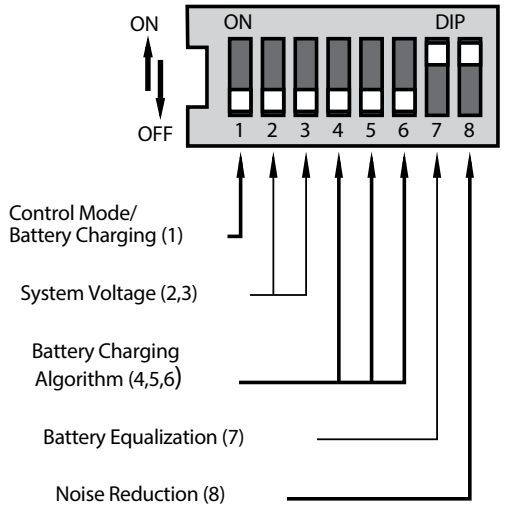


Figure 2.4 - Step 3 DIP Switch Functions

As shown in the diagram, all the positions are in the "OFF" position except switch numbers 7 and 8, which are in the "ON" position.

NOTE: The DIP switches should be changed only when there is no power to the controller. Turn off disconnect switches and remove all power to the controller before changing a DIP switch. A fault will be indicated if a switch is changed while the controller is powered.

REMARQUE : Les commutateurs DIP ne doivent être remplacés que si le contrôleur est hors tension. Mettez tous les interrupteurs sur arrêt et mettez le contrôleur hors tension avant de changer un commutateur DIP. Une panne sera indiquée en cas de changement d'un commutateur alors que le contrôleur est sous tension.

CAUTION: The charge controller is shipped with all the switches in the "OFF" position. Each switch position must be confirmed during installation. A wrong setting could cause damage to the battery or other system components.

PRUDENCE : Le charge controller est expédié avec tous les interrupteurs en position « ARRÊT ». La position de chaque interrupteur doit être confirmée pendant l'installation. Un mauvais réglage peut endommager la batterie ou d'autres composants du système.

The DIP switch settings described below are for Solar Battery Charging only. Load and Diversion switch settings can be found in Appendixes 1 and 2.

The DIP switches are shipped in the OFF position. With the switches in the OFF position, the following functions are present:

| Switch | Function |
|---|---|
| 1 | Battery charge mode |
| 2, 3 | Auto voltage select |
| 4, 5, 6 | Lowest battery charging voltage |
| 7 | Manual equalization |
| 8 | Normal PWM charging mode |

To configure your charge controller for the battery charging and control you require, follow the DIP switch adjustments described below. To change a switch from OFF to ON, slide the switch up toward the top of the controller. Make sure each switch is fully in the ON or OFF position.

## DIP Switch Number 1 - Control Mode: Solar Battery Charging

| Control | Switch 1 |
|---|---|
| Charging | Off |
| Load | On |

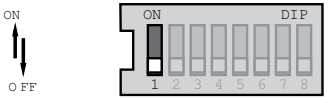


Figure 2.5 - Step 3 DIP Switch #1

For the Solar Battery Charging control mode, leave the DIP switch in the OFF position as shown.

## DIP Switches Number 2,3 - System Voltage:

| Voltage | Switch 2 | Switch 3 |
|---|---|---|
| Auto | Off | Off |
| 12 | Off | On |
| 24 | On | Off |
| 48 | On | On |

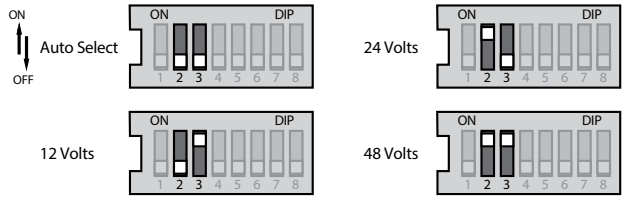


Figure 2.6 - Step 3 DIP Switches # 2,3

The auto voltage selection occurs when the battery is connected and the charge controller starts-up. There should be no loads on the battery that might cause a discharged battery to indicate a lower system voltage.

The DIP switch selectable voltages are for 12V, 24V or 48V lead-acid batteries. Although the “auto voltage” selection is very dependable, it is recommended to use the DIP switches to secure the correct system voltage.

## DIP Switches Number 4,5,6 - Battery Charging Algorithm:

| Battery Type | PWM | Switch 4 | Switch 5 | Switch 6 |
|---|---|---|---|---|
| 1 | 14.0 | Off | Off | Off |
| 2 | 14.15 | Off | Off | On |
| 3 | 14.35 | Off | On | Off |
| 4 | 14.4 | Off | On | On |
| 5 | 14.6 | On | Off | Off |
| 6 | 14.8 | On | Off | On |
| 7 | 15.0 | On | On | Off |
| 8 | Custom | On | On | On |

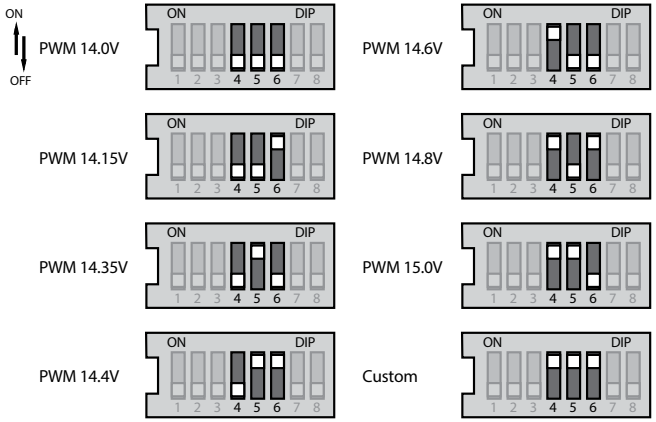


Figure 2.7 - Step 3 DIP Switch # 4,5,6

Select one of the 7 standard battery charging algorithms, or select the "custom" DIP switch for special custom settings using the PC software.

Refer to Section 9.0 of this manual for battery charging information. The 7 standard charging algorithms above are described in Section 4.2 - Standard Battery Charging Programs.

DIP Switch Number 7 - Battery Equalization:

| Equalize | Switch 7 |
|---|---|
| Manual | Off |
| Auto | On |

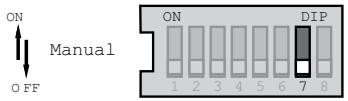


Figure 2.8 - Step 3 DIP Switch # 7

In the Auto Equalization mode (switch #7 On), battery equalization will automatically start and stop according to the battery program selected by the DIP switches 4,5,6 above. See Section 4.0 for detailed information about each standard battery algorithm and the equalization.

In the Manual Equalization mode (switch #7 Off), equalization will occur only when manually started with the push-button. Automatic starting of equalization is disabled. The equalization will automatically stop per the battery algorithm selected.

In both cases (auto and manual mode), the push-button can be used to start and stop battery equalization.

DIP Switch Number 8 - Noise Reduction:

| Charging | Switch 8 |
|---|---|
| PWM | Off |
| On-Off | On |

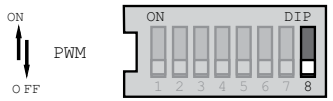


Figure 2.9- Step 3 DIP Switch # 8

The PWM battery charging algorithm is standard for all charges controllers. However, in cases where the PWM regulation causes noise inter-ference with loads (e.g. some types of telecom equipment or radios), the charge controller can be converted to an On-Off method of solar charge regulation.

It should be noted that the On-Off solar charge regulation is much less effective than PWM. Any noise problem should be suppressed in other ways, and only if no other solution is possible should the charge controller be changed to an On-Off charger.



LOAD CONTROL

DIP switch settings are in Appendix 1.

DIVERSION CHARGE CONTROL

DIP switch settings are in Appendix 2.



NOTE: Confirm all dip-switch settings before going to the next installation steps.

REMARQUE : Confirmez les réglages de tous les commutateurs dip avant de passer aux étapes suivantes d'installation.

## Step 4 - Remote Temperature Sensor (RTS)

For solar battery charging and diversion load control, a remote temperature sensor (RTS) is recommended for effective temperature compensated charging. This remote temperature probe should not be installed for dc load control.

The optional RTS is connected to the 2-position terminal located between the push-button and the LEDs. See the diagram below:

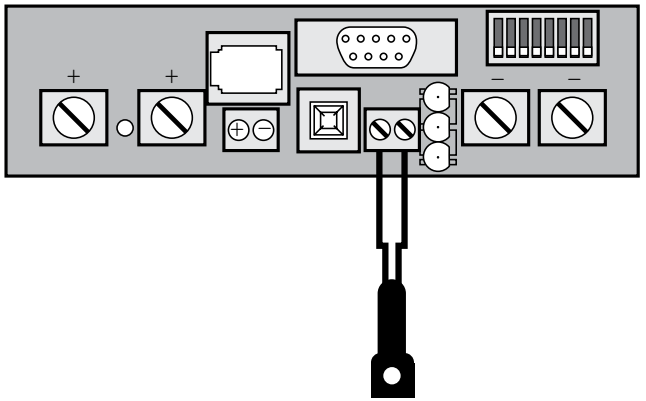


Figure 2.10- Step 4 RTS Connection

The RTS is supplied with 10 meters (33 ft) of 0.34 mm$^2$ (22 AWG) cable. There is no polarity, so either wire (+ or –) can be connected to either screw terminal. The RTS cable may be pulled through the conduit with the power wires. Tighten the connector screws with 0.56 Nm (5 in-lb) of torque.

Refer to the installation instructions provided with the RTS.

WARNING: Risk of Fire.

If no Remote Temperature Sensor (RTS) is connected, use the charge controller within 3m (10 ft) of the batteries. Internal Temperature Compensation will be used if the RTS is not connected. Use of the RTS is strongly recommended.

AVERTISSEMENT: Risque d'incendie.

Si non Capteur de température distant (RTS) est connecté, utilisez le charge controllermoins de 3m (10 pi) de les batteries. Compensation de la tempéra-ture interne sera utilisée si la RTS n'est pas connecté. Utilisation de la RTS est fortement recommandé.

NOTE: Never place the temperature sensor inside a battery cell. Both the RTS and the battery will be damaged.

REMARQUE : Ne placez jamais la sonde de température dans un élément de batterie. Le RTS et la batterie seraient endommagés.

## Step 5 - Battery Voltage Sense Connection

A battery voltage sense connection is not required to operate your charge controller, but it is recommended for best performance in all charging and load control modes. The battery voltage sense wires carry almost no current, so the voltage sense input avoids the large voltage drops that can occur in the battery power conductors. The voltage sense connection allows the controller to measure the actual battery voltage under all conditions.

In addition, if a charge controller meter will be added to the controller, the battery voltage sense will ensure that the voltage and diagnostic displays are very accurate.

The two battery voltage sense wires are connected to the charge controller at the 2-position terminal located between the push-button and the positive (+) terminal lug. See the diagram below:

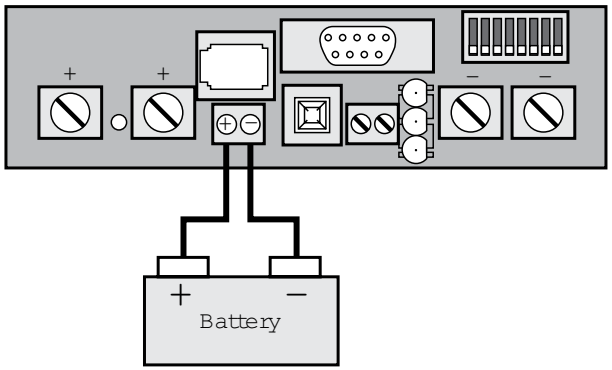


Figure 2.11 - Step 5 Battery Sense Connection

The two voltage sense wires (not provided with the controller) should be cut to length as required to connect the battery to the voltage sense terminal. The wire size can be from 1.0 to 0.25 mm² (16 to 24 AWG). It is recommended to twist the wires together every few feet (twisted pair), but this is not required. The voltage sense wires may be pulled through the conduit with the power wires.

Fuse the positive (+) voltage sense wire as close to the battery as possible. Size the fuse based on wire ampacity - a 1A fuse can be used for #24 wire.

Tighten the connector screws with 0.56 Nm (5 in-lb) of torque.



The maximum length allowed for each battery voltage sense wire is 30 meters (98 ft).

The battery sense terminal has polarity. Be careful to connect the battery positive (+) terminal to the voltage sense positive (+) terminal. No damage will occur if the polarity is reversed, but many functions of the controller can be affected. If a charge controller meter is installed, check the "charge controller Settings" to confirm the Voltage Sense and the RTS (if installed) are both present and "seen" by the controller. The PC software can also be used to confirm the voltage sense is working correctly.

Do not connect the voltage sense wires to the RTS terminal. This may cause an alarm. Review the installation diagram for the correct battery voltage sense connection.

Note that the battery voltage sense connection does not power (start-up) the controller.

## Step 6 - System Wiring and Power-Up

To comply with the NEC, the charge controller must be installed using wiring methods in accordance with the latest edition of the National Electric Code, NFPA 70.

Wire Size
The four large power terminals are sized for 35 - 2.5 mm² (2-14 AWG) wire. The terminals are rated for copper and aluminum conductors.

Good system design generally requires large conductor wires for the solar and battery connections that limit voltage drop losses to 3% or less. The following table provides the maximum wire length (1-way distance / 2-wire pair) for connecting the battery, solar array or load to the charge controller with a maximum 3% voltage drop.

| Wire Size | 60 Amps | 45 Amps | 30 Amps | 15 Amps |
|---|---|---|---|---|
| 95 mm² (3/0 AWG) | 12.86 m (42.2 ft.) | 17.15 m (56.3 ft.) | 25.72 m (84.4 ft.) | 51.44 m (168.8 ft.) |
| 70 mm² (2/0 AWG) | 10.19 m (33.4 ft.) | 13.58 m (44.6 ft.) | 20.38 m (66.8 ft.) | 40.75 m (133.7 ft.) |
| 50 mm² (1/0 AWG) | 8.10 m (26.6 ft.) | 10.80 m (35.4 ft.) | 16.21 m (53.1 ft.) | 32.41 m (106.3 ft.) |
| 35 mm² (2 AWG) | 5.12 m (16.8 ft.) | 6.83 m (22.4 ft.) | 10.24 m (33.6 ft.) | 20.48 m (67.2 ft.) |
| 25 mm² (4 AWG) | 3.21 m (10.5 ft.) | 4.27 m (14.0 ft.) | 6.41 m (21.0 ft.) | 12.82 m (42.1 ft.) |
| 16 mm2 (6 AWG) | 2.02 m (6.6 ft.) | 2.69 m (8.8 ft.) | 4.04 m (13.2 ft.) | 8.07 m (26.5 ft.) |
| 10 mm² (8 AWG) | 1.27 m (4.2 ft.) | 1.70 m (5.6 ft.) | 2.54 m (8.3 ft.) | 5.09 m (16.7 ft.) |
| 6 mm² (10 AWG) | | 1.06 m (3.5 ft.) | 1.60 m (5.2 ft.) | 3.19 m (10.5 ft.) |
| 4 mm² (12 AWG) | | | 1.00 m (3.3 ft.) | 2.01 m (6.6 ft.) |
| 2.5 mm² (14 AWG) | | | | 1.26 m (4.1 ft.) |

Table 2.3-6a Maximum 1-Way Wire Distance (12 Volts)

**NOTES:**

- The specified wire length is for a pair of conductors from the solar, load or battery source to the controller (1-way distance).
- Figures are in meters (m) and feet (ft).
- For 24 volt systems, multiply the 1-way length in the table by 2.
- For 48 volt systems, multiply the 1-way length in the table by 4.

The NEC requires that manually operated disconnect switches or circuit breakers must be provided for connections between the charge controller and the battery. If the overcurrent devices being used are not manually operated disconnects, then manual disconnect switches must be added. These manual switches must be rated the same as the overcurrent devices noted above.

- Refer to the NEC for more information.

Minimum Wire Size

The NEC requires that the wires carrying the system current never exceed 80% of the conductors' current rating. The table below provides the minimum size of copper wire allowed by NEC for the charge controller-45 and charge controller-60 versions. Wire types rated for 75˚C and 90˚C are included.

Minimum wire sizes for ambient temperatures to 45˚C are provided in the table below:

| charge controller-45 | 75C Wire | 90C Wire | charge controller-60 | 75C Wire | 90C Wire |
|---|---|---|---|---|---|
| | ≤ 45C 16 mm² (6 AWG) | 10 mm² (8 AWG) ≤ 45C | | 25 mm² (4 AWG) | 16 mm² (6 AWG) |

Table 2.3-6b Minimum Wire Size

Both copper and aluminum conductors can be used with a charge controller controller. If aluminum wire is used, the minimum size of the aluminum conductor must be one wire size larger than the minimum wire size specified in the table above.

Ground Connection

Use the grounding terminal in the wiring compartment to connect a copper wire to an earth ground or similar grounding point. The grounding terminal is identified by the ground symbol shown below that is stamped into the enclosure:



Ground Symbol

Per NEC 690.45 (A) and NEC Table 250.122, minimum sizes for copper grounding wire are:

| | |
|---|---|
| charge controller-45 | 10 AWG (5 mm²) |
| charge controller-60/M | 8 AWG (8 mm²) |

OR, of the same, or greater, cross-sectional area as the PV wires.

Connect the Power Wires

First, confirm that the DIP switch #1 is correct for the operating mode intended.



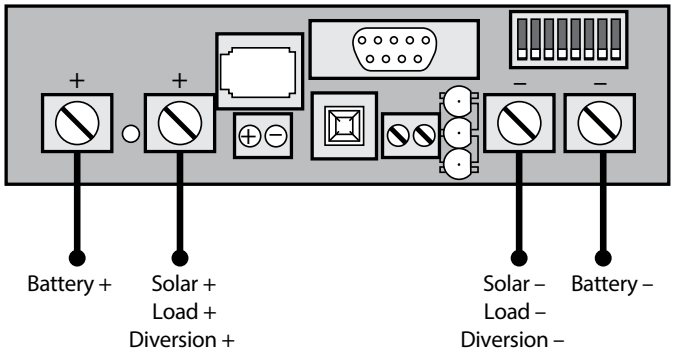


Figure 2.12 - Step 6 Power Wire Connections

CAUTION: The solar PV array can produce open-circuit voltages over 100 Vdc when in sunlight. Verify that the solar input breaker has been opened (disconnected) before installing the system wires (if the controller is in the solar charging mode).

PRUDENCE : Le réseau PV solaire peut produire des tensions de circuit ouvert supérieures à 100 V cc à la lumière du soleil. Vérifiez que le coupe-circuit solaire a été ouvert (déconnexion) avant d'installer les câbles du système (si le contrôleur est en mode de charge solaire).

Using the diagram on the previous page, connect the four power conductors in the following steps:

1. Confirm that the input and output disconnect switches are both turned off before connecting the power wires to the controller. There are no disconnect switches inside the charge controller.
2. Provide for strain relief if the bottom knockouts are used and conduit is not used.
3. Pull the wires into the wiring compartment. The temperature probe wires and battery voltage sense wires can be inside the conduit with the power conductors.
4. Connect the Battery + (positive) wire to the Battery + terminal.
5. Connect the Battery – (negative) wire to a charge controller common – terminal.
6. Connect the Solar + wire (positive) to the Solar + terminal. (or Load + / Diversion +)
7. Connect the Solar – (negative) wire a charge controller common – terminal. (or Load – / Diversion –)

NOTE: charge controller negative terminals are common negative.

The CE certification requires that the battery conductors, the battery voltage sense wires, and the remote temperature sensor shall not be accessible without the use of a tool and are protected in the battery compartment.

Do not bend the power wires up toward the access cover. If a charge controller-M meter is used now or in the future, these large wires can damage the meter assembly when the access cover is attached to the controller.

Torque each of the four power terminals to 5.65 Nm (50 in-lbs).

Power-Up

- Confirm that the solar (or load) and battery polarities are correct.
- Turn the battery disconnect on first. Observe the LEDs to confirm a successful start-up. (LEDs blink Green - Yellow - Red in one cycle)
- Note that a battery must be connected to the charge controller to start and operate the controller. The controller will not operate from a solar input only.
- Turn the solar (or load) disconnect on.

### Step 7 - RS-232 Adjustments

The charge controller must be powered from the battery to enable use of the RS-232 / PC computer connection. Refer to Section 7.0 for using the RS-232 and PC software to change set-points or confirm the installation settings.

### Step 8 - Finish Installation

Inspect for tools and loose wires that may have been left inside the enclosure.

Check the power conductors to make sure they are located in the lower part of the wiring compartment and will not interfere with the cover or the optional meter assembly.

NOTE: If the power conductors are bent upwards and touch the meter assembly (charge controller-M option), pressing the cover down on the wires can damage the meter.

REMARQUE : Si les conducteurs d'alimentation sont courbés vers le haut et touche l'ensemble de mesure (option charge controller-M), la pression du couvercle sur les câbles peut endommager l'appareil de mesure.

Carefully place the cover back on the controller and install the 4 cover screws.

Closely observe the system behavior and battery charging for 2 to 4 weeks to confirm the installation is correct and the system is operating as expected.



# 3.0 Operation

The charge controller operation is fully automatic. After the installation is completed, there are few operator tasks to perform. However, the operator should be familiar with the basic operation and care of the charge controller as described below.

## 3.1 Operator's Tasks

- Use the push-button as needed *(see 3.2 below)*
- Check the LEDs for status and faults *(see 3.3 below)*
- Support recovery from a fault as required *(see 3.4 below)*
- Routine inspection and maintenance *(see 3.6 below)*

*If a charge controller digital meter is installed, please refer to the meter manual.*

## 3.2 Push-button

In the battery charging mode (both solar and diversion), the following functions can be enabled with the push-button (located on the front cover):

PUSH: Reset from an error or fault.

PUSH: Reset the battery service indication if this has been activated with the PC software. A new service period will be started, and the flashing LEDs will stop blinking. If the battery service is performed before the LEDs begin blinking, the push-button must be pushed at the time when the LEDs are blinking to reset the service interval and stop the blinking.

PUSH AND HOLD 5 SECONDS: Begin battery equalization manually. This will begin equalization in either the manual or automatic equalization mode. The equalization will automatically stop per the battery type selected (see Section 4.4).

PUSH AND HOLD 5 SECONDS: Stop an equalization that is in progress. This will be effective in either the manual or automatic mode. The equalization will be terminated.

Note that if two or more charge controllers are charging in parallel, the equalization cycles may start on different days for various reasons (such as one controller is disconnected and restarted). If this happens, the push-button on each controller can be used to manually start and then stop an equalization,
and this will reset the equalizations to the same schedule.

**LOAD & LIGHTING CONTROL**

PUSH: Reset from an error or fault.

PUSH AND HOLD 5 SECONDS: After a low voltage disconnect (LVD) of the load, the push-button can be used to reconnect the loads again. The loads will remain on for 10 minutes, and will then disconnect again. The push-button can be used to override the LVD without limit.

**NOTE:** The purpose of the LVD is to protect the battery. Repeated overrides of an LVD can deeply discharge the battery and may damage the battery.

## 3.3 LED Indications

Valuable information can be provided by the three LEDs in the front cover. Although there are many different LED indications, they have similar patterns to make it easier to interpret each LED display. Consider as three groups of indications: General Transitions // Battery or Load Status // Faults.

**LED Display Explanation:**

G = green LED is lit
Y = yellow LED is lit
R = red LED is lit
G/Y = Green and Yellow are both lit at the same time
G/Y - R = Green & Yellow both lit, then Red is lit alone
Sequencing (faults) has the LED pattern repeating until the fault is cleared

**1. General Transitions:**

| | |
|---|---|
| • Controller start-up | G - Y - R (one cycle) |
| • Push-button transitions | blink all 3 LEDs 2 times |
| • Battery service is required | all 3 LEDs blinking until service is reset |

**2. Battery Status**

| | |
|---|---|
| • General state-of-charge | *see battery SOC indications below* |
| • PWM absorption | G blinking (1/2 second on / 1/2 second off) |
| • Equalization state | G fast blink (2 to 3 times per second) |
| • Float state | G slow blink (1 second on / 1 second off) |

**Battery State-of-Charge LED Indications** (when battery is charging):

| | |
|---|---|
| • G on | 80% to 95% SOC |
| • G/Y on | 60% to 80% SOC |
| • Y on | 35% to 60% SOC |
| • Y/R on | 0% to 35% SOC |
| • R on | battery is discharging |

Refer to the Specifications (Section 11.0) for the State-of-Charge voltages. Another LED chart is provided at the end of this manual (Appendix 3) for easier reference.

Note that because these State-of-Charge LED displays are for all battery types and system designs, they are only approximate indications of the battery charge state.



**LOAD & LIGHTING CONTROL**

**2. Load Status**

| | 12V | 24V | 48V |
|---|---|---|---|
| LVD+ | 0.60V | 1.20V | 2.40V |
| LVD+ | 0.45V | 0.90V | 1.80V |
| LVD+ | 0.30V | 0.60V | 1.20V |
| LVD+ | 0.15V | 0.30V | 0.60V |
| LVD | | | |

The load status LEDs are determined by the LVD voltage plus the specified transition voltages. As the battery voltage rises or falls, each voltage transition will cause a change in the LEDs.



**3. Faults & Alarms**

| | |
|---|---|
| • Short circuit - solar/load | R/G - Y sequencing |
| • Overload - solar/load | R/Y - G sequencing |
| • Over-temperature | R - Y sequencing |
| • High voltage disconnect | R - G sequencing |
| • Reverse polarity - battery | no LEDs are lighted |
| • Reverse polarity - solar | No fault indication |
| • DIP switch fault | R - Y - G sequencing |
| • Self-test faults | R - Y - G sequencing |
| • Temperature probe (RTS) | R/Y - G/Y sequencing |
| • Battery voltage sense | R/Y - G/Y sequencing |

## 3.4 Protections and Fault Recovery

The charge controller protections and automatic recovery are important elements of the operating system. The system operator should be familiar with the causes of faults, controller protections, and any actions that may be required.

Some basic fault conditions are reviewed below:

**Short circuit:**
(R/G-Y sequencing) When a short circuit occurs, the FET switches are opened in micro-seconds. The FETs will probably open before other protective devices in the system can react, so the short circuit may remain
in the system. The charge controller will try to reconnect the FETs two times. If the short circuit remains, the LEDs will continue sequencing.

After the short in the system is repaired, there are two ways to restart the controller:

- Power should have been disconnected to repair the short. When power is restored, the charge controller does a normal start-up and will reconnect the solar input or load.
- The push-button can also be used to reconnect the FET switches (if there is battery power to the charge controller).

***NOTE: There will always be a 10 second delay between attempts to reconnect the FET switches. Even if power is disconnected, the charge controller will wait for the remainder of the 10 seconds when the power is restored.***

***REMARQUE : Il existera toujours un délai de 10 secondes entre les tentatives de reconnexion des commutateurs TEC. Même si l'alimentation est déconnectée, le charge controller attend la fin des 10 secondes quand l'alimentation est rétablie.***

**Solar overload:**
(R/Y-G sequencing) If the solar input exceeds 100% of the controller's current rating, the controller will reduce the average current below the charge controller's rating. The controller is capable of managing up to 130% of the rated solar input.

When 130% rated current is exceeded, the solar will be disconnected and a fault will be indicated. The input FET switches will remain open for 10 seconds. Then the switches are closed again and charging resumes. These cycles can continue without limit.

The current overload is reduced to the "equivalent heating" of the rated current input. For example, a 72A solar array (120% overload) will PWM down to 50A, which is equivalent to the heating from a normal 60A solar input.

LOAD & LIGHTING CONTROL

**Load overload:**
(R/Y-G sequencing) If the load current exceeds 100% of the controller's rating, the controller will disconnect the load. The greater the overload, the faster the controller will disconnect. A small overload could take a few minutes to disconnect.

The charge controller will attempt to reconnect the load two times. Each attempt is at least 10 seconds apart. If the overload remains after 2 attempts, the load will remain disconnected. The overload must be corrected and the controller restarted. The push-button can also be used to reconnect the load.

DIVERSION CHARGE CONTROL

**Diversion overload:**
(R/Y-G sequencing) If the current to the diversion load exceeds the charge controller rating, the controller will attempt to reduce the load. If the overload is too large, the charge controller will disconnect the diversion load. The controller will continue attempts to reconnect the load.

If the overload LEDs are sequencing, the diversion load is too large for the controller. The size of the load must be reduced.

**Reversed polarity:**
If the battery polarity is reversed, there will be no power to the controller and no LEDs will light. If the solar is reversed, the controller detects nighttime and there will be no LED indication and no charging. If the load is reversed, loads with polarity will be damaged. Be very careful to connect loads to the controller with correct polarity. See Section 5.4.

**DIP switch fault:**
(R-Y-G sequencing) If a DIP switch is changed while there is power to the controller, the LEDs will begin sequencing and the FET switches will open. The controller must be restarted to clear the fault.



**Solar high temperature:**
(R-Y sequencing) When the heatsink temperature limit is reached, the charge controller will begin reducing the solar input current to prevent more heating. If the controller continues heating to a higher temperature, the solar input will then be disconnec-ted. The solar will be reconnected at the lower temperature (see Section 8.0).

LOAD & LIGHTING CONTROL

**Load high temperature:**
(R-Y sequencing) When the heatsink temperature limit is reached (90˚C / 194˚F), the charge controller will disconnect the load. The load will be reconnected at the lower temperature setting (70˚C / 158˚F).

DIVERSION CHARGE CONTROL

**Diversion high temperature:**
(R-Y sequencing) When the heat sink temperature reaches 80˚C, the charge controller will change to an on-off regulation mode to reduce the temperature. If the temperature reaches 90˚C, the load will be disconnected. The load is reconnected at 70˚C.

**Solar high voltage disconnect (HVD):**
(R-G sequencing) If the battery voltage continues increasing beyond normal operating limits, the controller will disconnect the solar input (unless the FET switches cannot open due to a failure). *See Section 11.0 for the disconnect and reconnect values.*

LOAD & LIGHTING CONTROL

**Load HVD:**
(R-G sequencing) In the Load Control mode, the HVD can only be enabled using the PC software. At the battery voltage value selected in the soft-ware, the charge controller will disconnect the load. At the selected lower voltage, the load will be reconnected.

DIVERSION CHARGE CONTROL

**Diversion HVD:**
In the Diversion mode, an HVD condition will not be indicated with the LEDs, and there is no disconnect. An HVD condition will be indicated on the optional meter.

**Battery removal voltage spike:**
(no LED indication) Disconnecting the battery before the solar input is discon-nected can cause a large solar open-circuit voltage spike to enter the system. The charge controller protects against these voltage spikes, but it is best to disconnect the solar input before the battery.

**Very low battery voltage:**
(LEDs are all off) Below 9 volts the controller will go into brownout. The controller shuts down. When the battery voltage rises, the controller will restart. In the Load Control mode, the charge controller will recover in the LVD state.

**Remote temperature sensor (RTS) failure:**
(R/Y-G/Y) If a fault in the RTS (such as a short circuit, open circuit, loose terminal) occurs after the RTS has been working, the LEDs will indicate a failure and the solar input is disconnected. However, if the controller is restarted with a failed RTS, the controller may not detect that the RTS is connected, and the LEDs will not indicate a problem. A charge controller meter or the PC software can be used to determine if the RTS is working properly.

**Battery voltage sense failure:**
(R/Y-G/Y) If a fault in the battery sense connection (such as a short circuit, open circuit, loose terminal) occurs after the battery sense has been working, the LEDs will indicate a failure. However, if the controller is restarted with the failure still present in the battery sense, the controller may not detect that the battery sense is connected, and the LEDs will not indicate a problem. A charge controller meter or the PC software can be used to determine if the battery sense is working properly.

## 3.5 Data-Logging

The charge controller records daily records of key system information. Data is stored in all operating modes: Charging, Load/Lighting, Diversion. In Charge mode records are written after dusk each day. In Load and Diversion modes, records are written every 24 hours and may not coincide with the natural day/night cycle. The logged data can be viewed using the charge controller Digital Meter 2 or charge controller Remote Meter 2. Data can also be accessed using MSView™ PC software, which is available for download on our website.

***NOTE: The Data Logging feature is available in charge controller firmware version v12 and later. Firmware update files and instructions are available on our website.***

## 3.6 Inspection and Maintenance

***WARNING: RISK OF ELECTRICAL SHOCK.***

*NO POWER OR ACCESSORY TERMINALS ARE ELECTRICALLY ISOLATED FROM DC INPUT, AND MAY BE ENERGIZED WITH HAZARDOUS SOLAR VOLTAGE. UNDER CERTAIN FAULT CONDITIONS, BATTERY COULD BECOME OVER-CHARGED. TEST BETWEEN ALL TERMINALS AND GROUND BEFORE TOUCHING.*

***AVERTISSEMENT: RISQUE DE CHOC ÉLECTRIQUE.***

*ON ALIMENTATION OU AUX BORNES D'ACCESSOIRES SONT ISOLÉS ÉLECTRIQUEMENT DE L'ENTRÉE DE C.C ET DOIT ÊTRE ALIMENTÉS À UNE TENSION DANGEREUSE SOLAIRE. SOUS CERTAINES CONDITIONS DE DÉFAILLANCE, LA BATTERIE POURRAIT DEVENIR TROP CHARGÉE. TEST ENTRE TOUTES LES BORNES ET LA MASSE AVANT DE TOUCHER.*

***WARNING: Shock Hazard***
*Disconnect all power sources to the controller before removing the wiring box cover. Never remove the cover when voltage exists on the charge controller power connections.*

***AVERTISSEMENT: Risque de décharge électrique***
*Un moyen de déconnexion de tous les poteaux d'alimentation doit être fourni. Ceux-ci se déconnecte doit être intégrée dans le câblage fixe. Ouvrir que toutes les source d'énergie se déconnecte avant de retirer le couvercle de la contrôleur, ou accès au câblage.*

3.0

The charge controller does not require routine maintenance. The following inspections are recommended two times per year for best long-term performance.

1. Confirm the battery charging is correct for the battery type being used. Observe the battery voltage during PWM absorption charging (green LED blinking 1/2 second on / 1/2 second off). Adjust for temperature compensation if an RTS is used *(see Table 4.3)*.

   For load and diversion modes, confirm that the operation is correct for the system as configured.
2. Confirm the controller is securely mounted in a clean and dry environment.
3. Confirm that the air flow around the controller is not blocked. Clean the heat sink of any dirt or debris.
4. Inspect for dirt, nests and corrosion, and clean as required.

# 4.0 Battery Charging

## 4.1 PWM Battery Charging

PWM (Pulse Width Modulation) battery charging is the most efficient and effective method for recharging a battery in a solar system.

Selecting the best method for charging your battery together with a good maintenance program will ensure a healthy battery and long service life. Although the charge controller's battery charging is fully automatic, the following information is important to know for getting the best performance from your charge controller controller and battery.

### 4.1.1 Four Stages of Solar Charging

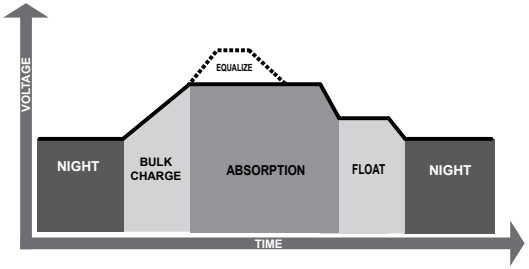


*Figure 4.1.1 Solar Charging Stages*

1. **Bulk Charging:** In this stage, the battery will accept all the current provided by the solar system. The LEDs will display an indication of the battery charge state as the battery is being recharged.
2. **PWM Absorption:** When the battery reaches the regulation voltage, the PWM begins to hold the voltage constant. This is to avoid over-heating and over-gasing the battery. The current will taper down to safe levels as the battery becomes more fully charged. The green LED will blink once per second. *See Section 4.2.*
3. **Equalization:** Many batteries benefit from a periodic boost charge to stir the electrolyte, level the cell voltages, and complete the chemical reactions. The green LED will blink rapidly 2-3 times per second. *See Section 4.4.*
4. **Float:** When the battery is fully recharged, the charging voltage is reduced to prevent further heating or gasing of the battery. The green LED will blink slowly once every 2 seconds. *See Section 4.5.*

### 4.1.2 Battery Charging Notes

The charge controller manages many different charging conditions and system configu-rations. Some useful functions to know follow below.

**Solar Overload:** Enhanced radiation or "edge of cloud effect" conditions can generate more current than the controller's rating. The charge controller will reduce this overload up to 130% of rated current by regulating the current to safe levels. If the current from the solar array exceeds 130%, the controller will interrupt charging *(see Section 3.4).*



**Battery Voltage Sense:** Connecting a pair of voltage sense wires from the controller to the battery is recommended. This allows a precise battery voltage input to the controller and more accurate battery charging. *See Section 4.3 for more information.*

**Temperature Compensation:** All charging set-points are based on 25˚C (77˚F). If the battery temperature varies by 5˚C, the charging will change by 0.15 volts for a 12 volt battery. This is a substantial change in the charging of the battery, and a remote temperature sensor is recommended to adjust charging to the actual battery temperature. *See Section 4.3 for more information.*

**Day-Night Detection:** The charge controller will automatically detect day and night conditions. Any functions that require measuring time or starting at dawn, for example, will be automatic.

**PWM Noise:** In some installations, the PWM charging may cause audible noise in certain equipment. If this occurs, the PWM can be changed to "On-Off" solar charging to reduce the noise. This requires DIP switch number 8 to be turned On. However, it is strongly recommended to try to remedy the noise problem with grounding or filtering first, because the benefits from PWM battery charging are significant.

**Battery Types:** The charge controller's standard battery charging programs are suitable for a wide range of lead-acid battery types. These standard programs are reviewed in the following Section 4.2. A general review of battery types and their charging needs is provided in Section 9.0.

## 4.2 Standard Battery Charging Programs

The charge controller provides 7 standard battery charging algorithms (programs) that are selected with the DIP switches (see Step 3 in Installation). These standard algorithms are suitable for lead-acid batteries ranging from sealed (gel, AGM, maintenance free) to flooded to L-16 cells. In addition, an 8th DIP switch provides for custom set-points using the PC software.

The table below summarizes the major parameters of the standard charging algorithms. Note that all the voltages are for 12V systems (24V = 2X, 48V = 4X).

**All values are 25°C (77°F).**

| DIP Switches (4-5-6) | A. Battery Type | B. PWM Absorp. Voltage | C. Float Voltage | D. Equal. Voltage | E. Time in Equal. (hours) | F. Equalize Interval (days) | G. Max Equal. Cycle (hours) |
|---|---|---|---|---|---|---|---|
| off-off-off | 1 - Sealed | 14.0 | 13.4 | none | – | – | – |
| off-off-on | 2 - Sealed | 14.15 | 13.4 | 14.2 | 1 | 28 | 1 |
| off-on-off | 3 - Sealed | 14.35 | 13.4 | 14.4 | 2 | 28 | 2 |
| off-on-on | 4 - Flooded | 14.4 | 13.4 | 15.1 | 3 | 28 | 4 |
| on-off-off | 5 - Flooded | 14.6 | 13.4 | 15.3 | 3 | 28 | 5 |
| on-off-on | 6 - Flooded | 14.8 | 13.4 | 15.3 | 3 | 28 | 5 |
| on-on-off | 7 - L-16 | 15.0 | 13.4 | 15.3 | 3 | 14 | 5 |
| on-on-on | 8 - Custom | | Custom | | | Custom | |

*Table 4.2 Standard Battery Charging Programs*

A. **Battery Type** - These are generic lead-acid battery types. *See Section 9.0 for more information about battery types and appropriate solar charging.*

B. **PWM Voltage**–This is the PWM Absorption stage with constant voltage charging. The "PWM voltage" is the maximum battery voltage that will be held constant. As the battery becomes more charged, the charging current tapers down until the battery is fully charged.

C. **Float Voltage**–When the battery is fully charged, the charging voltage will be reduced to 13.4 volts for all battery types. The float voltage and transition values are adjustable with the PC software. *See Section 4.5 for more details.*

D. **Equalization Voltage**–During an equalization cycle, the charging voltage will be held constant at this voltage.

E. **Time in Equalization**–The charging at the selected equalization voltage will continue for this number of hours. This may take more than one day to complete. See Section 4.4.

F. **Equalization Interval**–Equalizations are typically done once a month. Most of the cycles are 28 days so the equalization will begin on the same day of the week. Each new cycle will be reset as the equalization starts so that a 28 day period will be maintained.

G. **Maximum Equalization Cycle**–If the solar array output cannot reach the equalization voltage, the equalization will terminate after this many hours to avoid over gasing or heating the battery. If the battery requires more time in equalization, the manual push-button can be used to continue for one or more additional equalization cycles.

These (7) standard battery charging algorithms will perform well for the majority of solar systems. However, for systems with specific needs beyond these standard values, any or all of these values can be adjusted using the PC software. *See Section 7.0.*

## 4.3 Temperature Effects & Battery Voltage Sense

### 4.3.1 Remote Temperature Sensor (RTS)

The RTS is used for temperature compensated battery charging. As the battery gets warmer, the gasing increases. As the battery gets colder, it becomes more resistant to charging. Depending on how much the battery temperature varies, it may be important to adjust the charging for temperature changes.

There are three battery charging parameters that are affected by temperature:

**PWM Absorption**
This is the most important part of charging that is affected by temperature because the charging may go into PWM absorption almost every day. If the battery temperature is colder, the charging will begin to regulate too soon and the battery may not be recharged with a limited solar resource. If the battery temperature rises, the battery may heat and gas too much.

**Equalization**
A colder battery will lose part of the benefit of the equalization. A warmer battery may heat and gas too much.



**Float**
Float is less affected by temperature changes, but it may also undercharge or gas too much depending on how much the temperature changes.

The RTS corrects the three charging set-points noted above by the following values:

- 12 volt battery: –0.030 volts per ˚C (–0.017 volts per ˚F)
- 24 volt battery: –0.060 volts per ˚C (–0.033 volts per ˚F)
- 48 volt battery: –0.120 volts per ˚C (–0.067 volts per ˚F)

Variations in battery temperature can affect charging, battery capacity, and battery life. The greater the range of battery temperatures, the greater the impact on the battery. For example, if the temperature falls to 10˚C (50˚F) this 15˚C (27˚F) change in temperature will change the PWM, equalization and float set-points by 1.80V in a 48V system.

If a remote temperature sensor is not used and the temperatures near the battery are stable and predictable, the PWM absorption setting can be adjusted using the PC software per the following table:

| Temperature | 12 Volt | 24 Volt | 48 Volt |
|---|---|---|---|
| 40°C / 104°F | – 0.45 V | – 0.90 V | – 1.80 V |
| 35°C / 95°F | – 0.30 V | – 0.60 V | – 1.20 V |
| 30°C / 86°F | – 0.15 V | – 0.30 V | – 0.60 V |
| 25°C / 77°F | 0 V | 0 V | 0 V |
| 20°C / 68°F | + 0.15 V | + 0.30 V | + 0.60 V |
| 15°C / 59°F | + 0.30 V | + 0.60 V | + 1.20 V |
| 10°C / 50°F | + 0.45 V | + 0.90 V | + 1.80 V |
| 5°C / 41°F | + 0.60 V | + 1.20 V | + 2.40 V |
| 0°C / 32°F | + 0.75 V | + 1.50 V | + 3.00 V |
| – 5°C / 23°F | + 0.90 V | + 1.80 V | + 3.60 V |
| – 10°C / 14°F | + 1.05 V | + 2.10 V | + 4.20 V |
| – 15°C / 5°F | + 1.20 V | + 2.40 V | + 4.80 V |

***Table 4.3 Temperature Compensation***

The need for temperature compensation depends on the temperature variations, battery type, how the system is used, and other factors. If the battery appears to be gasing too much or not charging enough, an RTS can be added at any time after the system has been installed. *See Section 2.3 - Step 4 for installation instructions.*

The charge controller will recognize the RTS when the controller is started (powered-up).

### 4.3.2 Battery Voltage Sense

There can be voltage drops typically up to 3% in the power cables connecting the battery to the charge controller. If battery voltage sense wires are not used, the controller will read a higher voltage at the controller's terminals than the actual battery voltage while charging the battery.

Although limited to 3% as the generally accepted wiring standard, this can result in a 0.43 voltage drop for 14.4V charging (or 1.72V for a 48 volt nominal system).

These voltage drops will cause some undercharging of the battery. The controller will begin PWM absorption, or limit equalization, at a lower battery voltage because the controller measures a higher voltage at the controller's terminals than is the actual battery voltage. For example, if the controller is programmed to start PWM absorption at 14.4V, when the controller "sees" 14.4V at its battery terminals, the true battery voltage would only be 14.1V if there is a 0.3V drop between the controller and battery.

Two sense wires, sized from 1.0 to 0.25 $mm^2$ (16 to 24 AWG), can be used for battery voltage sense. Because these wires carry no current, the voltage at the charge controller will be identical to the battery voltage. A 2-position terminal is used for the connection

Note that the battery sense wires will not power the controller, and the sense wires will not compensate for losses in the power wires between the controller and the battery. The battery sense wires are used to improve the accuracy of the battery charging.

*See Section 2.3 - Step 5 for instructions how to connect the battery sense wires.*

## 4.4 Equalization

Routine equalization cycles are often vital to the performance and life of a battery — particularly in a solar system. During battery discharge, sulfuric acid is consumed and soft lead sulfate crystals form on the plates. If the battery remains in a partially discharged condition, the soft crystals will turn into hard crystals over time. This process, called "lead sulfation," causes the crystals to become harder over time and more difficult to convert back to soft active materials.

Sulfation from chronic undercharging of the battery is the leading cause of battery failures in solar systems. In addition to reducing the battery capacity, sulfate build-up is the most common cause of buckling plates and cracked grids. Deep cycle batteries are particularly susceptible to lead sulfation.

Normal charging of the battery can convert the sulfate back to the soft active material if the battery is fully recharged. However, a solar battery is seldom completely recharged, so the soft lead sulfate crystals harden over a period of time. Only a long controlled overcharge, or equalization, at a higher voltage can reverse the hardening sulfate crystals.

In addition to slowing or preventing lead sulfation, there are also other benefits from equalizations of the solar system battery. These include:

**Balance the individual cell voltages.**
Over time, individual cell voltages can drift apart due to slight differences in the cells. For example, in a 12 cell (24V) battery, one cell is less efficient in recharging to a final battery voltage of 28.8 volts (2.4 V/c). Over time, that cell only reaches 1.85 volts, while the other 11 cells charge to 2.45 volts per cell. The overall battery voltage is 28.8V, but the individual cells are higher or lower due to cell drift. Equalization cycles help to bring all the cells to the same voltage.

**Mix the electrolyte.**
In flooded batteries, especially tall cells, the heavier acid will fall to the bottom of the cell over time. This stratification of the electrolyte causes loss of capacity and corrosion of the lower portion of the plates. Gasing of the electrolyte from a controlled overcharging (equalization) will stir and remix the acid into the battery electrolyte.



***NOTE: Excessive overcharging and gasing too vigorously can damage the battery plates and cause shedding of active material from the plates. An equalization that is too high or for too long can be damaging. Review the requirements for the particular battery being used in your system.***

***REMARQUE : Une surcharge excessive et un dégagement gazeux trop vigoureux peuvent endommager les plaques de batteries et provoquer l'élimination du matériau actif des plaques. Une compensation trop élevée ou trop longue peut provoquer des dégâts. Examinez les exigences pour la batterie particulière utilisée dans votre système.***

### 4.4.1 Standard Equalization Programs

Both automatic and manual equalizations can be performed using either the standard charging programs (see 4.2) or a custom program (see 7.0).

**Manual Equalization**
The charge controller is shipped with the DIP switch set for manual equalization only. This is to avoid an unexpected or unwanted automatic equalization. In the manual mode, the push-button is used to both start or stop a manual equalization. Hold the push-button down for 5 seconds to start or stop an equalization (depending on whether an equalization is in progress or not).

The LEDs will confirm the transition (all 3 LEDs blink 2 times). When the battery charging enters into equalization, the Green LED will start fast blinking 2-3 times per second.

There are no limits to how many times the push-button can be used to start and stop equalizations. Equalizations will be terminated automatically per the charging program selected if the push-button is not used to manually stop the equalization.

**Automatic Equalization**
If the equalization DIP switch is moved to the ON position (see 2.3 - Step 3), the equalizations will begin automatically per the charging program selected. Other than starting, the automatic and manual equalizations are the same and follow the standard charging program selected. The push-button can be used to start and stop equalizations in both the manual and automatic mode.

### 4.4.2 Typical Equalizations

The automatic equalizations will occur every 28 days (except L-16 cells at 14 days). When an equalization begins (auto or manual), the battery charging voltage increases up to the equalization voltage (Veq). The battery will remain at Veq for the time specified in the selected charging program (see table in 4.2).

If the time to reach Veq is too long, the maximum equalization cycle time will end the equalization. A second manual equalization cycle can be started with the push-button if needed.

If the equalization cannot be completed in one day, it will continue the next day or days until finished. After an equalization is completed, charging will return to PWM absorption.

### 4.4.3 Preparation for Equalization

First, confirm that all your loads are rated for the equalization voltage. Consider that at 0˚C (32˚F) the equalization voltage will reach 16.05V in a 12V system (64.2V in a 48V system) with a temperature sensor installed. Disconnect any loads at risk.

If Hydrocaps are used, be sure to remove them before starting an equalization. Replace the Hydrocaps with standard battery cell caps. The Hydrocaps can get very hot during an equalization. Also, if Hydrocaps are used, the equalization should be set for manual only (DIP switch #7 is Off).

After the equalization is finished, add distilled water to each cell to replace gasing losses. Check that the battery plates are covered.

### 4.4.4 When to Equalize

The ideal frequency of equalizations depends on the battery type (lead-calcium, lead-antimony, etc.), the depth of discharging, battery age, temperature, and other factors.

One very broad guide is to equalize flooded batteries every 1 to 3 months or every 5 to 10 deep discharges. Some batteries, such as the L-16 group, will need more frequent equalizations.

The difference between the highest cell and lowest cell in a battery can also indicate the need for an equalization. Either the specific gravity or the cell voltage can be measured. The battery manufacturer can recommend the specific gravity or voltage values for your particular battery.

### 4.4.5 "Equalize" a Sealed Battery?

The standard battery charging table (see Section 4.2) shows two sealed batteries with an "equalization" cycle. This is only a 0.05 volt (12V battery) boost cycle to level individual cells. This is not an equalization, and will not vent gas from sealed batteries that require up to 14.4V charging (12V battery). This "boost" charge for sealed cells allows for adjustability with the PC software.

Many VRLA batteries, including AGM and gel, have increased charging requirements up to 14.4V (12V battery). The 0.05V boost shown in the table (Section 4.2) is less than the accuracy range of most charge controllers. Alternatively, for these two sealed battery charging programs you may prefer to consider the PWM absorption stage to be 14.2V and 14.4V (12V battery).

The 14.0, 14.2, and 14.4 volt standard charging programs should be suitable for most sealed batteries. If not optimum for your battery, the PC software can be used to adjust these values. *Refer to Section 9.0 for more information about charging sealed batteries.*

## 4.5 Float

When a battery becomes fully charged, dropping down to the float stage will provide a very low rate of maintenance charging while reducing the heating and gasing of a fully charged battery. When the battery is fully recharged, there can be no more chemical reactions and all the charging current is turned into heat and gasing.

The purpose of float is to protect the battery from long-term overcharge. From the PWM absorption stage, charging is dropped to the float voltage. This is typically 13.4V, and is adjustable with the PC software.

The transition to float is based on the previous 24 hour history. Factors include the battery voltage, the state of charge the night before, the battery type, and the PWM duty cycle and stability of the duty cycle. The battery will be charged for part of the day until the transition to float.

If there are loads for various periods of time during float, the charge controller will cancel float and return to bulk charge.

Float is temperature compensated.

# 5.0 Load and Lighting Control

## 5.1 General Load & Lighting Control Notes

**IMPORTANT:**

### 5.1.1 Inductive loads

Do not connect inductive loads such as inverters, motors, pumps, compressors, generators to the load terminals. Inductive loads can generate large voltage spikes that may damage the controller's lightning protection devices. Connect inductive loads directly to the battery.

If a heavy load must be connected to the charge controller's load terminals e.g. for LVD purposes, contact Tech Support for a design solution.

### 5.1.2 Parallel charge controllers

Two or more charge controllers should never be put in parallel for a large load. The controllers cannot share the load.

### 5.1.3 Reverse Polarity

If the battery is correctly connected (LEDs are on), the load should be connected very carefully with regard to polarity (+ / –).

If the polarity is reversed, the controller cannot detect this. There are no indications.

Loads without polarity will not be affected.

Loads with polarity can be damaged. It is possible that the charge controller will go into short circuit protection before the load is damaged. If the LEDs indicate a "short", be certain to check for both shorts and reversed polarity connections.

If the controller does not go into short circuit protection, the loads with polarity will be damaged.

***CAUTION: Carefully verify the polarity (+ and –) of the load connections before applying power to the controller.***

***PRUDENCE : Vérifiez avec précaution la polarité (+ et –) des connexions de la charge avant de mettre le contrôleur sous tension.***

## 5.2 Load Control Settings

The primary purpose of a low voltage load disconnect function (LVD) is to protect the system battery from deep discharges that could damage the battery.

In the Load Control mode, the charge controller provides for seven standard LVD settings that are selected by the DIP switches. These are described in the table below. Custom LVD settings are possible using the PC software (see Section 7.0).

| DIP Switch | 12V LVD | 24V LVD | 48V LVD | Battery SOC% | 12V $LVD_R$ | 24V $LVD_R$ | 48V $LVD_R$ |
|---|---|---|---|---|---|---|---|
| off-off-off | 11.1 | 22.2 | 44.4 | 8 | 12.6 | 25.2 | 50.4 |
| off-off-on | 11.3 | 22.6 | 45.2 | 12 | 12.8 | 25.6 | 51.2 |
| off-on-off | 11.5 | 23.0 | 46.0 | 18 | 13.0 | 26.0 | 52.0 |
| off-on-on | 11.7 | 23.4 | 46.8 | 23 | 13.2 | 26.4 | 52.8 |
| on-off-off | 11.9 | 23.8 | 47.6 | 35 | 13.4 | 26.8 | 53.6 |
| on-off-on | 12.1 | 24.2 | 48.4 | 55 | 13.6 | 27.2 | 54.4 |
| on-on-off | 12.3 | 24.6 | 49.2 | 75 | 13.8 | 27.6 | 55.2 |
| on-on-on | Custom | | | Custom | Custom | | |

*Table 5.1*

The table above describes the standard selectable LVD battery voltages for 12, 24 and 48 volt systems. The $LVD_R$ values are the load reconnect set-points. The "Battery SOC %" provides a general battery state-of-charge figure for each LVD setting. The actual battery SOC can vary considerably depending on the battery condition, discharge rates, and other specifics of the system.

***NOTE: The lowest LVD settings are intended for applications such as telecom that only disconnect the load as a last resort. These lower LVD settings will deeply discharge the battery and should not be used for systems that may go into LVD more than once a year.***

***REMARQUE : Les réglages les plus bas du disjoncteur basse tension sont prévus pour les applications comme celles de télécom qui ne déconnectent la charge qu'en dernier recours. Ces réglages les plus bas du disjoncteur basse tension déchargent fortement la batterie et ne doivent pas être utilisés avec les systèmes qui risquent de déclencher le disjoncteur basse tension plus d'une fois par an.***

The LVD values in table 5.1 above are current compensated. Under load, the battery voltage will be reduced in proportion to the current draw by the load. A short-term large load could cause a premature LVD without the current compensation. The LVD values in the table above are adjusted lower per the following table:

| | charge controller-45 | chargecontroller-60 |
|---|---|---|
| 12V | –15 mV per amp | –10 mV per amp |
| 24V | –30 mV per amp | –20 mV per amp |
| 48V | –60 mV per amp | –40 mV per amp |

As an example, consider a 24V system using a charge controller-60 with a 30 amp load. The LVD will be reduced by 0.02V (per the table above) times 30 amps. This equals –0.6V. A DIP-switch selected LVD of 23.4V would be reduced to 22.8V in this example.

Note that the LEDs are linked to the LVD setting, so the LEDs are also current compensated.

*continued...*

5.0

After an LVD, the load reconnect voltages are 0.25 volts per battery cell higher than the LVD (for example, in a 12V system the $LVD_R$ would be 1.5 volts above LVD). Battery voltages can rise quickly after an LVD, typically from 1.0 to 1.3 volts or more (12V system). The $LVD_R$ value must be high enough to avoid cycling in and out of LVD.

## 5.3 LVD Warning

When the battery is discharging and the green LED changes to the next state (G-Y LEDs on), there are four remaining transitions to LVD (refer to the LED indications in Section 3.3). Each of these LED displays will serve as a warning of an approaching LVD. The final warning is a blinking red LED state.

The amount of time from the initial G-Y display until the load disconnect will depend on many factors. These include:

- The rate of discharge.
- The health of the battery
- The LVD setting

For a “typical” system with a healthy battery and an LVD setting of about 11.7 volts, there could be approximately 10 hours per LED transition. The LVD would occur about 40 hours from the first G-Y display (under constant load with no charging).

Another significant factor affecting the warning time is the LVD voltage setpoint. Lower LVD voltage settings may result in the battery discharging 70% or 80% of its capacity. In this case, the battery’s very low charge state will result in the voltage dropping much faster. At the lowest LVD settings, there could be as little as 2 or 3 hours of warning between LED transitions for a healthy battery.

The amount of time it takes to transition through the LEDs to LVD can vary greatly for different systems. It may be worthwhile to measure the time it takes for your system to transition from one LED state to the next. Do this under “typical” discharging loads.

This will provide a good reference for how long it will take for your system to reach LVD. It can also provide a benchmark for judging the health of your battery over time.

# 6.0 Diversion Charge Control

The charge controller's third mode of operation is diversion load battery charge control. As the battery becomes fully charged, the charge controller will divert excess current from the battery to a dedicated diversion load. This diversion load must be large enough to absorb all the excess energy, but not too large to cause a controller overload condition.

## 6.1 Diversion Charge Control

In the diversion mode, the charge controller will use PWM charging regulation to divert excess current to an external load. As the battery becomes fully charged, the FET switches are closed for longer periods of time to direct more current to the diversion load.



As the battery charges, the diversion duty cycle will increase. When fully charged, all the source energy will flow into the diversion load if there are no other loads. The generating source is typically a wind or hydro generator. Some solar systems also use diversion to heat water rather than open the solar array and lose the energy.

The most important factor for successful diversion charge control is the correct sizing of the diversion load. If too large, the controller’s protections may open the FET switches and stop diverting current from the battery. This condition can damage the battery.

If you are not confident and certain about the installation, a professional installation by your dealer is recommended.

## 6.2 Diversion Current Ratings

The maximum diversion load current capability for the two charge controller versions is 45 amps (charge controller-45) and 60 amps (charge controller-60/M). The diversion loads must be sized so that the peak load current cannot exceed these maximum ratings.

See section 6.4 below for selecting and sizing the diversion loads.

The total current for all combined charging sources (wind, hydro, solar) should be equal or less than two-thirds of the controller’s current rating: 30A (charge controller-45) and 40A (charge controller-60/M). This limit will provide a required margin for high winds and high water flow rates as well as a margin for error in the rating and selection of the diversion load. This protects against an overload and a safety disconnect in the charge controller, which would leave the battery charging unregulated.

***CAUTION: If the charge controller's rating is exceeded and the controller dis-connects the diversion load, Larson will not be responsible for any damage resulting to the system battery or other system compo-nents. Refer to Limited Warranty in Section 10.0.***

***PRUDENCE : Si la capacité du charge controller est dépassée et que le contrôleur déconnecte la charge de diversion, Larson ne sera pas responsable de tout dommage résultant de la batterie du système ou d’autres composants du système. Reportez-vous à la Garantie limitée de dans la Section 10.0.***

## 6.3 Standard Diversion Battery Charging Programs

The charge controller provides 7 standard diversion charging algorithms (programs) that are selected with the DIP switches. An 8th algorithm can be used for custom set-points using the PC software.

The table below summarizes the major parameters of the standard diversion battery charging algorithms. Note that all the voltages are for 12V systems (24V = 2X, 48V = 4X).

All values are @25°C (77°F).

| DIP Switches (4-5-6) | A. PWM Absorp. Voltage | B. Float Voltage | C. Time Until Float (hours) | D. Equalization Voltage | E. Time in Equal. (hours) | F. Equalize Interval (days) | G. Max. Equalize Cycle (hours) |
|---|---|---|---|---|---|---|---|
| off-off-off | 13.8 | 13.6 | 4 | 14.1 | 3 | 28 | 3 |
| off-off-on | 14.0 | 13.6 | 4 | 14.3 | 3 | 28 | 3 |
| off-on-off | 14.2 | 13.6 | 4 | 14.5 | 3 | 28 | 4 |
| off-on-on | 14.4 | 13.6 | 4 | 14.7 | 4 | 28 | 4 |
| on-off-off | 14.6 | 13.7 | 4 | 14.9 | 4 | 28 | 5 |
| on-off-on | 14.8 | 13.7 | 4 | 15.1 | 4 | 28 | 5 |
| on-on-off | 15.0 | 13.7 | 4 | 15.3 | 4 | 28 | 5 |
| on-on-on | | Custom | | Custom | | Custom | |

*Table 6.1 Standard Diversion Charging Programs*

A. **PWM Absorption Voltage** - This is the PWM Absorption stage with constant voltage charging. The PWM absorption voltage is the maximum battery voltage that will be held constant.

B. **Float Voltage** - When the battery is fully charged, the charging voltage will be reduced to the float voltage for all diversion settings. The float voltage and transition values are adjustable with the PC software.

C. **Time Until Float** - This is the cumulative time in PWM before the battery voltage is reduced to the float voltage. If loads are present during the PWM absorption, the time to transition into float will be extended.

D. **Equalization Voltage** - During an equalization cycle, the charging voltage will be held constant at this voltage. Equalizations are manual, and can be selected for automatic *(See Section 4.4.1)*.

E. **Time in Equalization** - Charging at the selected equalization voltage will continue for this number of hours.

F. **Equalization Interval** - Equalizations are typically done once a month. The cycles are 28 days so the equalization will begin on the same day of the week. Each new cycle will be reset as the equalization starts so that a 28 day period will be maintained.

G. **Maximum Equalization Cycle** - If the battery voltage cannot reach the equalization voltage, the equalization will terminate after this number of hours to avoid over gasing or heating the battery. If the battery requires more time in equalization, the manual push-button can be used to continue for one or more additional equalization cycles.

### 6.3.1 Battery Charging References

The diversion load battery charging is similar to conventional solar charging. Refer to the following sections in this manual for additional battery charging information.

- **4.1 Four stages of charging (applies to diversion)**
- **4.3 Temperature Effects and Battery Voltage Sense**
- **4.4 Equalization**
- **4.5 Float**
- **9.0 Battery Information**



## 6.4 Selecting the Diversion Load

It is critical that the diversion load be sized correctly. If the load is too small, it cannot divert enough power from the source (wind, hydro, etc). The battery will continue charging and could be overcharged.

If the diversion load is too large, it will draw more current than the rating of the charge controller. The controller's overload protection may disconnect the diversion load, and this will result in all of the source current going to the battery.

***CAUTION: The diversion load must be able to absorb the full power output of the source, but the load must never exceed the current rating of the charge controller controller. Otherwise, the battery can be overcharged and damaged.***

***PRUDENCE : La charge de diversion doit être capable d'absorber toute la puissance de sortie de la source, mais la charge ne doit jamais dépasser l'intensité nominale du contrôleur charge controller, pour ne pas surcharger et endommager la batterie.***

### 6.4.1 Suitable Loads for Diversion

Water heating elements are commonly used for diversion load systems. These heating elements are reliable and widely available. Heating elements are also easy to replace, and the ratings are stable.

***NOTE: Do not use light bulbs, motors, or other electrical devices for diversion loads. These loads will fail or cause the charge controller to disconnect the load. Only heating elements should be used.***

***REMARQUE : N'utilisez pas d'ampoules, de moteurs ou d'autres appareils électriques pour les charges de diversion. Ces charges ne fonctionneront pas ou provoqueront une déconnexion de la charge par le charge controller. Seuls les éléments de chauffe doivent être utilisés.***

Water heating elements are typically 120 volts. Elements rated for 12, 24 and 48 volts are also available, but more difficult to source. The de-rating for 120 volt heating elements is discussed in 6.4.3 below.

### 6.4.2 Definition of Terms

**Maximum Source Current:**
This is the maximum current output of all the energy sources (hydro, wind, solar, etc.) added together. This current will be diverted through the charge controller to the diversion load.

**Maximum Battery Voltage:**
This maximum voltage is the PWM regulation voltage selected with the DIP switches, plus the increase with an equalization, plus the increase due to lower temperatures. The highest battery voltage is commonly 15, 30 and 60 volts for 12-, 24- and 48-volt systems.

**Peak Load Current:**
At the maximum battery voltage, this is the current the diversion load will draw. This peak load current must not exceed the charge controller's rating.

***NOTE: Because the battery can supply any size load, the peak load current is not limited by the source (hydro or wind rating). The diversion load's power rating is the critical specification for reliable battery charging.***

***REMARQUE : La batterie pouvant fournir une charge de n'importe quelle dimension, le pic d'intensité de la charge n'est pas limité par la source (puissance hydro ou éolienne). La puissance nominale de la charge de diversion constitue la spécification critique pour une charge fiable de la batterie.***

### 6.4.3 Load Power Ratings

The power rating of the diversion load will depend on the voltage of the battery being charged. If the heating element is not rated for the same voltage as the diversion system, the power rating of the load must be adjusted to the diversion system's voltage.

The manufacturers typically rate the heating elements for power at a specified voltage. The peak load current at the load's rated voltage will be the power divided by the rated voltage (I = P / V). For example: 2000W / 120V = 16.7 amps of current.

If the load is being used at a voltage less than the load's rated voltage, the power can be calculated by the ratio of the voltages squared. For example, a 120 volt 1000 watt heating element being used at 60 volts:

**1000W x $(60/120)^2$ = 250 watts**

The 1000W element will only dissipate 250W when being used at 60 volts.

***NOTE: The loads (heating elements) can be used at the manufacturer's voltage rating, or at a lower voltage. Do not use the load at a higher voltage than the load's rating.***

***REMARQUE : Les charges (éléments de chauffe) peuvent être utilisées à la tension nominale du fabricant ou à une tension inférieure. N'utilisez pas la charge à une tension supérieure à la tension nominale.***

### 6.4.4 Maximum Diversion Load

The diversion load should never exceed the charge controller's current rating (45A or 60A). Note that the load is not limited by the source (wind, hydro), and will draw its rated current from the battery.

The following table specifies the absolute maximum diversion loads that can be used with each charge controller version. These loads (heating elements) are rated for the same voltage as the system voltage.

| Nominal Voltage | charge controller-45 | charge controller-60 |
|---|---|---|
| 48V | 2700W at 60V | 3600W at 60V |
| 24V | 1350W at 30V | 1800W at 30V |
| 12V | 675W at 15V | 900W at 15V |

These maximum power ratings are translated to the equivalent at 120 volts in the following table. If using heating elements rated for 120 volts, the power ratings of all the elements can be simply added up and the sum compared with this table and no further math is required.

| Nominal Voltage | charge controller-45 | charge controller-60 |
|---|---|---|
| 48V | 10,800W at 120V | 14,400W at 120V |
| 24V | 21,600W at 120V | 28,800W at 120V |
| 12V | 43,200W at 120V | 57,600W at 120V |

To illustrate the same point from the opposite perspective, a heating element rated for 120 volts will draw reduced load current as indicated by the following table. A standard 2,000 watt / 120 Vac heating element is used as the reference.

| Voltage | Power | Current |
|---|---|---|
| 120V | 2000 W | 16.7 A |
| 60V (48V nominal) | 500 W | 8.3 A |
| 30V (24V nominal) | 125 W | 4.2 A |
| 15V (12V nominal) | 31 W | 2.1 A |

Whether using dc rated loads (the first table) or 120V elements, the total diversion load current must not exceed the current rating of the charge controller.

### 6.4.5 Minimum Diversion Load

The diversion load must be large enough to divert all the current produced by the source (wind, hydro, etc.). This value is the maximum battery voltage times the maximum source current.

For example, if a hydro source can generate up to 30 amps of current in a nominal 48 volt system (60V maximum), the minimum diversion load size = 60V x 30A = 1,800 watts (for loads rated at 60 volts).

**General Sizing Example**

Consider a 24V system with a wind turbine that is rated to generate 35A of current. A charge controller-45 will not provide the 150% diversion load margin, and the charge controller-45 is only rated for 30A of source current. The charge controller-45 will not provide enough margin for wind gusts and overloads, so a charge controller-60/M should be used.

The diversion load should be sized for 52.5A (150% of the source current) up to 60A (the rating of the charge controller-60). If 55A is selected for the diversion load, the load must be capable of diverting 55A at 30V (maximum battery voltage). If a 30V heating element is used, it would be rated for 1,650 watts (or from 1,575W to 1,800W per the load range noted above).

If a 2,000 watt / 120 volt heating element is used, 13 of these elements in parallel will be required for the diversion load (4.2 amps per element [Table in 6.4.4] x 13 = 54.6 amps).

*continued...*





Larson Electronics, LLC Phone: (800) 369-6671 Fax: (903) 498-3364 www.larsonelectronics.com

The minimum diversion load would be the source output (35A) times the voltage (30V). This would require a 1,050 watt heating element rated at 30 volts. Or if a 2,000W heater element rated for 120 volts is used, 9 heater elements will be required to draw the required minimum diversion load at 30 volts.

## 6.5 NEC Requirements

To comply with NEC 690.72 (B), the following requirements will apply when the charge controller is being used as a diversion charge controller in a photovoltaic system.

### 6.5.1 Second Independent Means

If the charge controller is the only means of regulating the battery charging in a diversion charging mode, then a second independent means to prevent overcharging the battery must be added to the system. The second means can be another charge controller, or a different means of regulating the charging.

### 6.5.2 150 Percent Rating

The current rating of the diversion load must be at least 150% of the charge controller source current rating. *Refer to Section 6.2 (Diversion Current Rating).* The maximum allowable current ratings for both charge controller versions are summarized below:

| | Max. Input Current | Max. Diversion Load Rating |
|---|---|---|
| charge controller-45 | 30 A | 45 A |
| charge controller-60/M | 40 A | 60 A |

***CAUTION: The NEC requirement that the diversion load must be sized at least 150% of the controller rating does NOT mean the diversion load can exceed the maximum current rating of the charge controller. NEVER size a diversion load that can draw more than the 45 amps or 60 amps maximum rating of the charge controller controllers.***

***PRUDENCE : L'obligation de la CNE indiquant que la charge de diversion doit être 150 % plus grande que la puissance nominale du contrôleur NE signifie PAS que la charge de diversion peut dépasser l'intensité maximum du charge controller. Ne dimensionnez JAMAIS une charge de diversion qui peut appeler plus de 45 A ou l'intensité maximum de 60 A des contrôleurs charge controller.***

# 7.0 Custom Settings with PC Software

An RS-232 connection between the charge controller and an external personal computer (PC) allows many set-points and operating parameters to be easily adjusted. The adjustments can be simply a small change to one setpoint, or could include extensive changes for a fully customized battery charging or load control program.

***CAUTION: Only qualified service personnel should change operating parameters with the PC software. There are minimal safeguards to protect from mistakes. Larson is not responsible for any damage resulting from custom settings.***

***PRUDENCE : Seul le personnel d'entretien qualifié doit modifier les paramètres de fonctionnement avec le logiciel sur ordinateur. Des protections minimales protègent contre les erreurs. Larson n'est pas responsable des dommages résultants de réglages personnalisés.***

## 7.1 Connection to a Computer

An RS-232 cable with DB9 connectors (9 pins in 2 rows) will be required.

If the computer will be used to change battery charging or load control set-points, verify that DIP switches 4, 5, 6 are in the custom position (On, On, On) before connecting the charge controller to a computer. The custom position is required to change set-points. See Section 2.3 - Step 3. Disconnect power before changing DIP switches.

## 7.2 Using the PC Software

Download the charge controller PC software. Follow the instructions on the website for installing the software on your computer.

Open the charge controller PC software. This software will make the connection with the charge controller via the RS-232 cable. The charge controller must be powered by the battery or a power supply to complete the connection. If there is a conflict between the charge controller and PC comm ports, the software will provide instructions to resolve the problem.

## 7.3 Changing Set-points

Follow the instructions in the PC software.

***CAUTION: There are few limits to the changes that can be made. It is the responsibility of the operator to be certain all changes are appropriate. Any damage resulting to the controller or the system from charge controller setpoint adjustments will not be covered under warranty.***

***PRUDENCE : Les modifications pouvant être effectuées sont sujettes à quelques limites. Il incombe à l'opérateur de s'assurer que toutes les modifications sont appropriées. Tout dommage au contrôleur ou au système résultant de réglages des points de consigne du charge controller ne sera pas couvert par la garantie.***

If you are not certain about each of the changes you are making, the software provides for returning to the factory default settings.

## 7.4 Finish

Confirm that the changes made to the charge controller are as you intended. It is advisable to make a record of the changes for future reference. Observe the system behavior and battery charging for a few weeks to verify that the system is operating correctly and as you intended.

Exit the software. The PC/charge controller connection can either be disconnected or left in place.

# 8.0 Self-Test / Diagnostics

The charge controller performs a continuous self-test to monitor controller and system operation. Detected problems are classified as either faults or alarms. Typically, faults are problems that stop the normal operation of the controller and require immediate attention. Alarms indicate an abnormal condition, but will not stop the controller's operation.

If a problem is detected, the charge controller will alert the user to an existing fault or alarm. In this situation, the LED indicators will flash a particular sequence. Section 3.3 references these sequences with their associated faults and alarms. Flashing LED sequences can indicate conditions ranging from a simple battery service reminder to an existing short circuit in the system. It is recommended that the user become familiar with the LED indications and their meanings.

If a charge controller meter option has been added, more detailed information concerning faults and alarms will be available. Menus provide text displays of the specific fault as well as indicating on the standard display screens when a problem exists. *Consult the meter manual for further details.*

## 8.1 General Troubleshooting

**charge controller is not powering up**

- Confirm that all circuit breakers and switches in the system are closed
- Check all fuses
- Check for loose wiring connections and wiring continuity
- Verify that the battery voltage is not below 9Vdc *(brownout: section 3.4)*
- Verify that the battery power connection is not reversed polarity

**Flashing/Sequencing LEDs**

- *Reference Section 3.3 for a list of LED indications and their corresponding faults/ alarms*

**Self-Test Indication (R - Y - G sequencing)**

- Self-testing will also detect various system wiring faults outside the charge controller
- Check for both charge controller faults and external system wiring problems

**The RTS or Battery Sense is not working properly**

- R/Y – G/Y sequencing LEDs indicates an RTS or Sense fault
- Check for a reverse polarity connection on the sense leads
- Verify that the RTS and Sense connections are wired to the correct terminals
- Check for shorts and continuity in the cables
- Verify that good electrical contact is made at the terminals
- Note that if the charge controller is restarted with an RTS or Sense fault present, it will not detect the RTS or Sense connection and the LED indication will stop.

## 8.2 Troubleshooting Solar Charging

- Over-charging or under-charging the battery
- DIP switch settings may be wrong
- RTS is not correcting for high or low temperatures
- Over-temperature condition is reducing the charging current (heat sink cooling may be blocked — indicated with LEDs)
- Voltage drop between charge controller and battery is too high *(connect the battery voltage sense — see Section 2.3 Step 5)*
- Battery charging requires temperature compensation (connect a remote temperature sensor)
- Load is too large and is discharging the battery

**Not charging the battery**

- DIP switch settings may be wrong (check each switch position carefully)
- charge controller has detected a fault *(indicated by sequencing LEDS, refer to Section 3.3)*
- Solar circuit breaker or disconnect is open
- Reversed polarity connections at the solar terminals (charge controller will not detect the solar array)
- Short circuit in the solar array has eliminated part of the array output
- Solar array is not providing enough current (low sun or fault in the array)
- Battery is failing and cannot hold a charge

## 8.3 Troubleshooting Load Control

**No power to the load**

- DIP switch settings may be wrong (check each switch position carefully)
- Controller is in LVD (check the LEDs)
- Load circuit breaker or disconnect may be open
- Check the load cables for continuity and good connection
- An over-temperature condition may have caused the load to be disconnected

## 8.4 Troubleshooting Diversion Control

- Diversion load is too small so PWM reaches 99%
- Diversion load is burned out so PWM reaches 99%
- Diversion load is too large so charge controller faults on overcurrent
- An overtemperature condition may have caused the load to be disconnected
- The RTS is not correcting for high or low temperatures
- Voltage drops between the charge controller and battery are too high

**Still having problems?** Contact 1-800-369-6671 for technical support documents, FAQs, or to request technical support.



# 9.0 Battery Information

The standard battery charging programs in the charge controller controller, as described in Section 4.2, are typical charging algorithms for three battery types:

- sealed (VRLA)
- flooded (vented)
- L-16 group

Other battery chemistries such as NiCad, or special voltages such as 36V, can be charged using a custom charging algorithm modified with the PC software. Only the standard charge controller battery charging programs will be discussed here.

***CAUTION: Never attempt to charge a primary (non-rechargeable) battery.***

***PRUDENCE : N'essayez jamais de charger une batterie primaire (non-rechargeable).***

All charging voltages noted below will be for 12V batteries at 25˚C.

## 9.1 Sealed Batteries

The general class of sealed batteries suitable for solar systems are called VRLA (Valve Regulated Lead-Acid) batteries. The two main characteristics of VRLA batteries are electrolyte immobilization and oxygen recombination. As the battery recharges, gasing is limited and is recombined to minimize the loss of water.

The two types of VRLA batteries most often used in solar are AGM and Gel.

**AGM:**
Absorbed Glass Mat batteries are still considered to be a "wet cell" because the electrolyte is retained in fiberglass mats between the plates. Some newer AGM battery designs recommend constant voltage charging to 2.45 volts/cell (14.7V). For cycling applications, charging to 14.4V or 14.5V is often recommended.

AGM batteries are better suited to low discharge applications than daily cycling. These batteries should not be equalized since gasing can be vented which causes the battery to dry out. There is also a potential for thermal runaway if the battery gets too hot, and this will destroy the battery. AGM batteries are affected by heat, and can lose 50% of their service life for every 8˚C (15˚F) over 25˚C (77˚F).

It is very important not to exceed the gas recombination capabilities of the AGM. The optimum charging temperature range is from 5 to 35˚C (40 to 95˚F).

**Gel:**
Gel batteries have characteristics similar to AGM, except a silica additive immobilizes the electrolyte to prevent leakage from the case. And like AGM, it

is important to never exceed the manufacturer's maximum charging voltages. Typically, a gel battery is recharged in cycling applications from 14.1V to 14.4V. The gel design is very sensitive to overcharging.

For both AGM and Gel batteries, the goal is for 100% recombination of gases so that no water is lost from the battery. True equalizations are never done, but a small boost charge may be needed to balance the individual cell voltages.

**Other Sealed Batteries:**
Automotive and "maintenance-free" batteries are also sealed. However, these are not discussed here because they have very poor lifetimes in solar cycling applications.

***NOTE: Consult the battery manufacturer for the recommended solar charging settings for the battery being used.***

***REMARQUE : Consultez le fabricant de la batterie quant aux réglages recommandés de charge solaire pour la batterie utilisée.***

## 9.2 Flooded Batteries

Flooded (vented) batteries are preferred for larger cycling solar systems. The advantages of flooded batteries include:

- ability to add water to the cells
- deep cycle capability
- vigorous recharging and equalization
- long operating life

In cycling applications, flooded batteries benefit from vigorous charging and equalization cycles with significant gasing. Without this gasing, the heavier electrolyte will sink to the bottom of the cell and lead to stratification. This is especially true with tall cells. Hydrocaps can be used to limit the gasing water loss.

Note that a 4% mixture of hydrogen in air is explosive if ignited. Make certain the battery area is well ventilated.

Typical equalization voltages for flooded batteries are from 15.3 volts to 16 volts. However, a solar system is limited to what the solar array can provide. If the equalization voltage is too high, the array I-V curve may go over the "knee" and sharply reduce the charging current.

**Lead-Calcium:**
Calcium batteries charge at lower voltages (14.2 to 14.4 typically) and have strong advantages in constant voltage or float applications. Water loss can be only 1/10th of antimony cells. However, calcium plates are not as suitable for cycling applications.

**Lead-Selenium:**
These batteries are similar to calcium with low internal losses and very low water consumption throughout their life. Selenium plates also have poor cycling life.

**Lead-Antimony:**
Antimony cells are rugged and provide long service life with deep discharge capability. However, these batteries self-discharge much faster and the self-discharging increases up to five times the initial rate as the battery ages. Charging the antimony battery is typically from 14.4V to 15.0V, with a 120% equalization overcharge. While the water loss is low when the battery is new, it will increase by five times over the life of the battery.

There are also combinations of plate chemistries that offer beneficial tradeoffs. For example, low antimony and selenium plates can offer fairly good cycling performance, long life, and reduced watering needs.

***NOTE: Consult the battery manufacturer for the recommended solar charging settings for the battery being used.***

***REMARQUE : Consultez le fabricant de la batterie quant aux réglages recommandés de charge solaire pour la batterie utilisée.***

## 9.3 L-16 Cells

One particular type of flooded battery, the L-16 group, is often used in larger solar systems. The L-16 offers good deep-cycle performance, long life, and low cost.

The L-16 battery has some special charging requirements in a solar system. A study found that nearly half of the L-16 battery capacity can be lost if the regulation voltage is too low and the time between finish-charges is too long. One standard charging program in the charge controller is specifically for L-16 batteries, and it provides for higher charging voltages and more frequent equalizations. Additional equalizations can also be done manually with the push-button.

A good reference for charging L-16 batteries is a Sandia National Labs report (year 2000) titled "PV Hybrid Battery Tests on L-16 Batteries." Website: www.sandia.gov/pv.

***NOTE: The best charging algorithm for flooded, deep-cycle batteries depends on the normal depth-of-discharge, how often the battery is cycled, and the plate chemistry. Consult the battery manufacturer for the recommended solar charging settings for the battery being used.***

***REMARQUE : Le meilleur algorithme de charge pour les batteries à électrolyte liquide à décharge poussée dépend de l'amplitude de la décharge, de la fréquence du cycle de batterie et de la composition chimique des plaques. Consultez le fabricant de la batterie quant aux réglages recommandés de charge solaire pour la batterie utilisée.***

# 10.0 Warranty

## LIMITED WARRANTY
## Charge Controller

The charge controller is warrantied to be free from defects in material and workmanship for a period of FIVE (5) years from the date of shipment to the original end user. Larson will, at its option, repair or replace any such defective products.

WARRANTY EXCLUSIONS AND LIMITATIONS:

This warranty does not apply under the following conditions:

♦ Damage by accident, negligence, abuse or improper use

♦ PV or load currents exceeding the ratings of the product

♦ Unauthorized product modification or attempted repair

♦ Damage occurring during shipment

♦ Damage results from acts of nature such as lightning and weather extremes

THE WARRANTY AND REMEDIES SET FORTH ABOVE ARE EXCLUSIVE AND IN LIEU OF ALL OTHERS, EXPRESS OR IMPLIED. LARSON SPECIFICALLY DISCLAIMS ANY AND ALL IMPLIED WARRANTIES, INCLUDING, WITHOUT LIMITATION, WARRANTIES OF MERCHANTABILITY AND FITNESS FOR A PARTICULAR PURPOSE. NO MORNINGSTAR DISTRIBUTOR, AGENT OR EMPLOYEE IS AUTHORIZED TO MAKE ANY MODIFICATION OR EXTENSION TO THIS WARRANTY.

MORNINGSTAR IS NOT RESPONSIBLE FOR INCIDENTAL OR CONSEQUENTIAL DAMAGES OF ANY KIND, INCLUDING BUT NOT LIMITED TO LOST PROFITS, DOWN-TIME, GOODWILL OR DAMAGE TO EQUIPMENT OR PROPERTY.

R17-8/16

# 11.0 Technical Specifications

## ELECTRICAL

- System voltage ratings: 12, 24, 48 Vdc
- Current ratings — **Solar Input**

charge controller-45: 45 A
charge controller-60/M: 60 A

- Current ratings — **Battery Charge Control**

charge controller-45: 45 A
charge controller-60/M: 60 A

- Current ratings — **Load Control**

charge controller-45: 45 A
charge controller-60/M: 60 A

- Current ratings — **Diversion Charge Control**

charge controller-45: 45 A diversion load
charge controller-60/M: 60 A diversion load

- Accuracy: 12/24V: ≤ 0.1 % ± 50 mV; 48V: ≤ 0.1 % ± 100 mV
- Min. voltage to operate: 9 V
- Max. solar array Voc: 125 V
- Max. operating voltage: 68 V
- Self-consumption: less than 20 mA
- High temp shutdown: 95°C disconnect solar; 90°C disconnect load / diversion load; 70°C reconnect solar / load / diversion load
- Solar high voltage disconnect: highest equalization + 0.2V
  HVD reconnect: 13.0V
- Transient surge protection: 4500 watts
- Pulse power rating response: < 5 nanosec

## BATTERY CHARGING / RTS

- Charge algorithm: PMW, constant voltage
- Temp comp. coefficient: –5mV/°C/cell (25°C ref)
- Temp comp. range: –30°C to +80°C
- Temp comp. set-points: PWM, float, equalize, HVD (with RTS option)

11.0

## BATTERY CHARGING STATUS LEDs

| | |
|---|---|
| G | 13.3 to PWM |
| G/Y | 13.0 to 13.3 V |
| Y | 12.65 to 13.0 V |
| Y/R | 12.0 to 12.65 V |
| R | 0 to 12.0 V |

Note: Multiply x 2 for 24V systems, x 4 for 48V systems

Note: The LED indications are for charging a battery. When discharging, the LEDs will typically be Y/R or R.

## MECHANICAL

| | |
|---|---|
| • Dimensions (mm/inch) | H: 260.4 mm / 10.25 inch<br>W: 127.0 mm / 5.0 inch<br>D: 71.0 mm / 2.8 inch |
| • Weight (kg/lb) | 1.6 kg / 3.5 lb |
| • Power terminals: | compression connector lug |
| largest wire | 35 $mm^2$ / 2 AWG |
| smallest wire | 2.5 $mm^2$ / 14 AWG |
| • Terminal wire slot | 8.2 mm / 0.324 in wide<br>9.4 mm / 0.37 in high |
| • Knockout sizes | 1 and 1.25 inch |
| • Torque terminals | 5.65 Nm / 50 in-lb |
| • RTS / Sense terminals: | |
| wire sizes | 1.0 to 0.25 $mm^2$ / 16 to 24 AWG |
| torque | 0.40 Nm / 3.5 in-lb |

## ENVIRONMENTAL

| | |
|---|---|
| • Operating Altitude | Below 2000 meters |
| • Ambient temperature | –40 to +45°C |
| • Storage temperature | –55 to +85°C |
| • Humidity | 100% (NC) |
| • Enclosure | IP20 Type 1 (indoor & vented),<br>powder coated steel |



## Appendix 1 — Load & Lighting Control DIP Settings

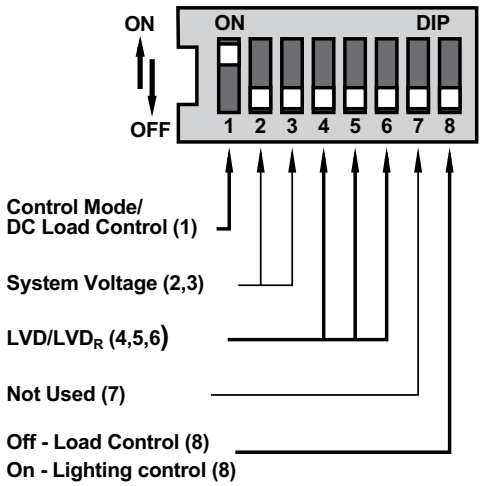


**Figure A1-1 - Step 3. Load / lighting DIP Switch Functions**

***NOTE**: The DIP switches should be changed only when there is no power to the controller. Turn off disconnect switches and remove power to the controller before changing a DIP switch. A fault will be indicated if a switch is changed with the controller powered.*

***REMARQUE** : Les commutateurs DIP ne doivent être changés que si le contrôleur est hors tension. Mettez les interrupteurs sur arrêt et mettez le contrôleur hors tension avant de changer un commutateur DIP. Une panne sera indiquée en cas de changement d'un commutateur quand le contrôleur est sous tension.*

***CAUTION**: The charge controller is shipped with all the switches in the "OFF" position. Each switch position must be confirmed during installation. An incorrect setting could cause damage to the load or other system components.*

***PRUDENCE** : Le charge controller est expédié avec tous les interrupteurs en position « ARRÊT ». La position de chaque interrupteur doit être confirmée pendant l'installation. Un mauvais réglage peut endommager la charge ou d'autres composants du système.*

Appendices

The DIP switch settings described below are for **Load and Lighting Control** only.

The DIP switches are shipped in the OFF position. The OFF settings will operate as follows:

| Switch | Function |
|---|---|
| 1 | Must be ON for Load, Lighting or Diversion Control |
| 2, 3 | Auto voltage select |
| 4, 5, 6 | Lowest LVD = 11.1V |
| 7 | Diversion Control mode OFF |
| 8 | Lighting Control mode OFF |

To configure your charge controller for the Load Control you require, follow the DIP switch adjustments described below. To change a switch from OFF to ON, slide the switch up toward the top of the controller. Make sure each switch is fully in the ON or OFF position.

### DIP Switch Number 1 - Control Mode: Load & Lighting Control

| Mode | Switch 1 |
|---|---|
| Charging | Off |
| Load/Lighting | On |

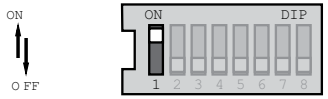


**Figure A1-2 - Step 3 DIP Switch #1**

For Load or Lighting Control mode, move the DIP switch to the ON position as shown.

### DIP Switches Number 2,3 - System Voltage:

| Voltage | Switch 2 | Switch 3 |
|---|---|---|
| Auto | Off | Off |
| 12 | Off | On |
| 24 | On | Off |
| 48 | On | On |

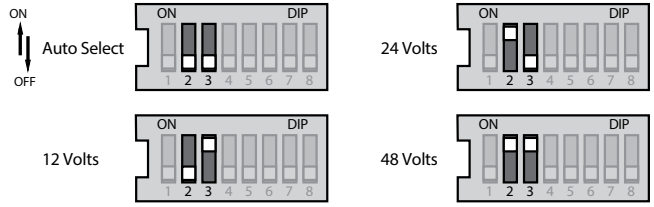


**Figure A1-3 - Step 3 DIP Switches # 2,3**

The auto voltage selection occurs when the battery is connected and the charge controller starts up. There should be no loads on the battery that might cause a discharged battery to indicate a lower system voltage.

The DIP switch selectable voltages are for 12V, 24V or 48V lead-acid batteries. Although the "auto voltage" selection is very dependable, it is recommended to use the DIP switches to secure the correct system voltage.

### DIP Switches Number 4,5,6 - Load Control Algorithm:

**For normal Load Control Mode, set the DIP switches 4,5,&6 according to the table below. For Lighting Control, see the table and Figure 2.4 on the next page.**

| LVD | Switch 4 | Switch 5 | Switch 6 |
|---|---|---|---|
| 11.1 | Off | Off | Off |
| 11.3 | Off | Off | On |
| 11.5 | Off | On | Off |
| 11.7 | Off | On | On |
| 11.9 | On | Off | Off |
| 12.1 | On | Off | On |
| 12.3 | On | On | Off |
| Custom | On | On | On |

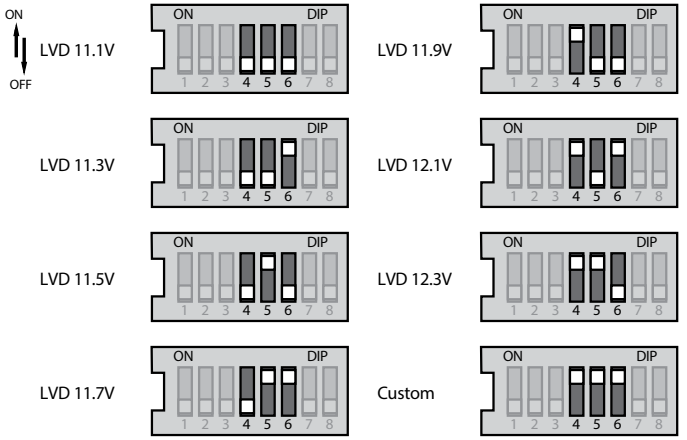


**Figure A1-4 - Step 3 DIP Switch # 4,5,6**

Select one of the 7 standard load control algorithms, or select the "custom" DIP switch for special custom settings using the PC software.

*Refer to Section 5.1 for the 7 standard LVD settings, $LVD_R$ reconnect settings, and current compensation values.*

Appendices

### DIP Switches Number 4,5,6 - Lighting Control Algorithm:

**For Lighting Control mode, set the DIP switches 4,5,& 6 according to the table below.**

| hrs after Sunset | hrs before Sunrise | Switch 4 | Switch 5 | Switch 6 |
|---|---|---|---|---|
| 6 | 0 | Off | Off | Off |
| 8 | 0 | Off | Off | On |
| 10 | 0 | Off | On | Off |
| 3 | 1 | Off | On | On |
| 4 | 2 | On | Off | Off |
| 6 | 2 | On | Off | On |
| Dusk to Dawn | | On | On | Off |
| Custom | | On | On | On |

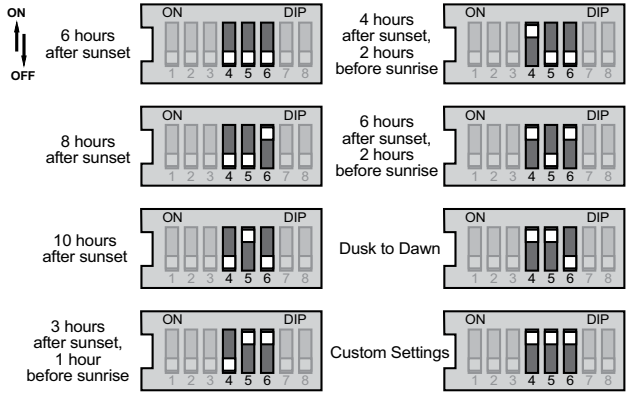


**Figure A1-5 - Step 3 DIP Switch # 4,5,6**

Select one of the 7 standard Lighting Control algorithms, or select the "custom" DIP switch for special custom settings using the PC software.

*The default LVD and LVD reconnect settings for Lighting Control are listed below. These values can be changed in custom settings.*

*LVD* 11.40 Volts
*LVDR* 13.00 Volts

### DIP Switch Number 7 - Must be OFF:

| Switch 7 |
|---|
| Off |

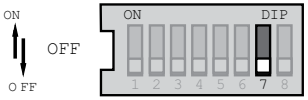


***Figure A1-6 - Step 3 DIP Switch # 7***

In Load Control and Lighting modes, DIP switch #7 must be in the OFF position.

### DIP Switch Number 8 - Lighting Control:

| Control | Switch 8 |
|---|---|
| Lighting Disabled | Off |
| Lighting Enabled | On |

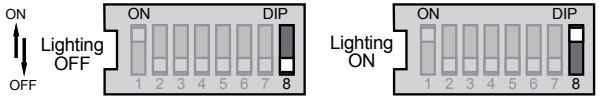


***Figure A1-7 - Step 3 DIP Switch # 8***

To enable lighting control, DIP switch #8 must be in the ON position.

***NOTE: Confirm all dip-switch settings before going to the next installation steps.***

***REMARQUE : Confirmez les réglages de tous les commutateurs dip avant de passer aux étapes suivantes d'installation.***

Appendices

# Appendix 2 - Diversion Charge Control DIP Switch Settings

The **Diversion Charge Control** DIP function adjustments:

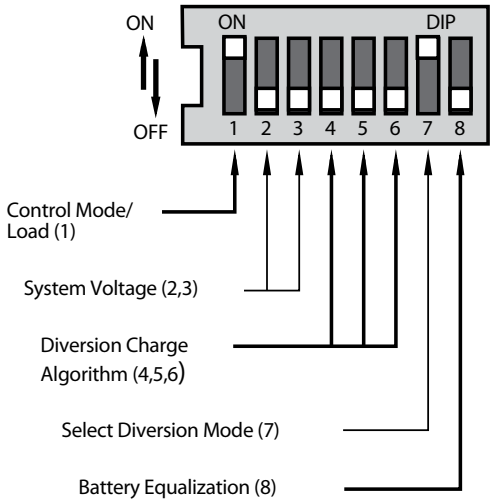


*Figure A2-1 - Step 3 (Diversion) DIP Switch Functions*

As shown in the diagram, all the positions are in the "OFF" position except switches 1 and 7, which are "ON".

***NOTE: The DIP switches should be changed only when there is no power to the controller. Turn off disconnect switches and remove all power to the controller before changing a DIP switch. A fault will be indicated if a switch is changed with the controller powered.***

***REMARQUE : Les commutateurs DIP ne doivent être changés que si le contrôleur est hors tension. Mettez les interrupteurs sur arrêt et mettez le contrôleur hors tension avant de changer un commutateur DIP. Une panne sera indiquée en cas de changement d'un commutateur quand le contrôleur est sous tension.***

***CAUTION: The charge controller is shipped with all the switches in the "OFF" position. Each switch position must be confirmed during installation. A wrong setting could cause damage to the battery or other system components.***

***PRUDENCE : Le charge controller est expédié avec tous les interrupteurs en position « ARRÊT ». La position de chaque interrupteur doit être confirmée pendant l'installation. Un mauvais réglage peut endommager la charge ou d'autres composants du système.***

The DIP switch settings described below are **Diversion Charge Control** only.

The DIP switches are shipped in the OFF position. With switches 1 and 7 in the ON position, Diversion Charge Contol is set. The OFF settings will operate as follows:

| Switch | Function |
|---|---|
| 1 | Must be ON to set Diversion Control |
| 2, 3 | Auto voltage selected |
| 4, 5, 6 | Lowest battery charging voltage |
| 7 | Must be ON to set Diversion Control |
| 8 | Manual Equalization |

To configure your charge controller for the diversion battery charging and control you require, follow the DIP switch adjustments described below. To change a switch from OFF to ON, slide the switch up toward the top of the controller. Make sure each switch is fully in the ON or OFF position.

## DIP Switch Number 1 - Control Mode: Solar Battery Charging

| Control | Switch 1 |
|---|---|
| Charging | Off |
| Load | On |

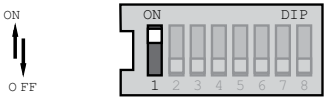


*Figure A2-2 - Step 3 DIP Switch #1*

For the Diversion Charge Control mode, move the DIP switch to the ON position as shown.

## DIP Switches Number 2,3 - System Voltage:

| Voltage | Switch 2 | Switch 3 |
|---|---|---|
| Auto | Off | Off |
| 12 | Off | On |
| 24 | On | Off |
| 48 | On | On |

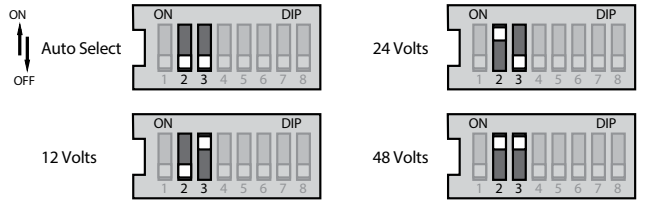


*Figure A2-3 - Step 3 DIP Switches # 2,3*

The auto voltage selection occurs when the battery is connected and the charge controller starts-up. There should be no loads on the battery that might cause a discharged battery to indicate a lower system voltage.

The DIP switch default voltages are for 12V, 24V or 48V lead-acid batteries. Although the "auto voltage" selection is very dependable, it is recommended to use the DIP switches to secure the correct system voltage.

Appendices

### DIP Switches Number 4,5,6 - Diversion Charge Control:

| Battery Type | PWM | Switch 4 | Switch 5 | Switch 6 |
|---|---|---|---|---|
| 1 | 13.8 | Off | Off | Off |
| 2 | 14.0 | Off | Off | On |
| 3 | 14.2 | Off | On | Off |
| 4 | 14.4 | Off | On | On |
| 5 | 14.6 | On | Off | Off |
| 6 | 14.8 | On | Off | On |
| 7 | 15.0 | On | On | Off |
| 8 | Custom | On | On | On |

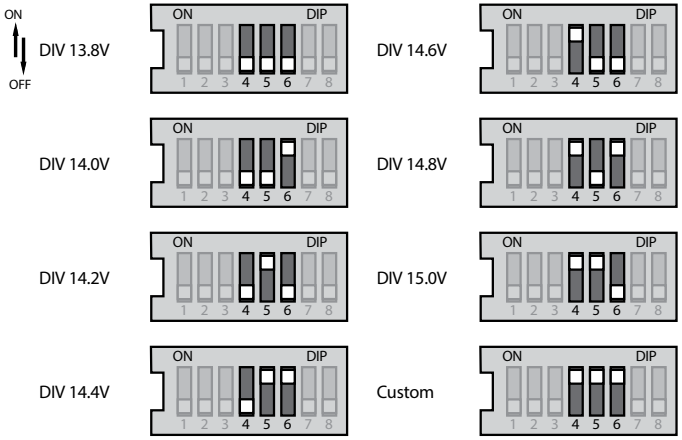


*Figure A2-4 - Step 3 DIP Switches # 4,5,6*

Select one of the 7 standard diversion charging algorithms, or select the "custom" DIP switch for special custom settings using the PC software.

*Refer to Section 6.3 for information describing the 7 standard diversion charging algorithms. Refer to Section 9.0 of this manual for battery charging information.*

### DIP Switch Number 7 - Select Diversion:

| | Switch 7 |
|---|---|
| On | |

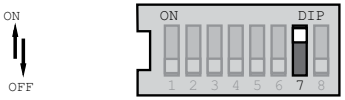


*Figure A2-5 - Step 3 DIP Switch # 7*

In the Diversion Charge Control mode, DIP switch 7 must be in the ON position.

### DIP Switch Number 8 - Battery Equalization:

| | Equalize Switch 8 |
|---|---|
| Manual | Off |
| Auto | On |

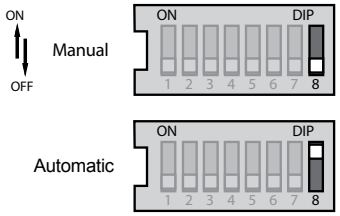


*Figure A2-6 - Step 3 DIP Switch # 8*

In the Auto Equalization mode (switch 8 On), battery equalization will automatically start and stop according to the battery program selected by the DIP switches 4,5,6 above. See Section 6.0 for detailed information about each standard diversion battery charging algorithm and equalization.

In the Manual Equalization mode (switch # Off), equalization will occur only when manually started with the push-button. Automatic starting of equalization is disabled. The equalization will automatically stop per the battery algorithm selection.

In both cases (auto and manual mode), the push-button can be used to start and stop battery equalization.

***NOTE: Confirm all dip-switch settings before going to the next installation steps.***

***REMARQUE : Confirmez les réglages de tous les commutateurs dip avant de passer aux étapes suivantes d'installation.***

Appendices



Larson Electronics, LLC Phone: (800) 369-6671 Fax: (903) 498-3364 www.larsonelectronics.com

## Appendix 3 - LED Indications

**LED Display Explanation:**

G = green LED is lit
Y = yellow LED is lit
R = red LED is lit
G/Y = Green and Yellow are both lit at the same time
G/Y - R = Green & Yellow both lit, then Red is lit alone
Sequencing (faults) has the LED pattern repeating until the fault is cleared

**1. General Transitions:**

| | |
|---|---|
| • Controller start-up | G - Y - R (one cycle) |
| • Push-button equalize start | G/Y/R - G/Y/R - G (one cycle) |
| • Push-button equalize stop | G/Y/R - G/Y/R - R (one cycle) |
| • Battery service is required | all 3 LEDs blinking until service is reset |

**2. Battery Status**

| | |
|---|---|
| • General state-of-charge | *see battery SOC indications below* |
| • PWM absorption | G blinking (1/2 second on / 1/2 second off) |
| • Equalization state | G fast blink (2 to 3 times per second) |
| • Float state | G slow blink (1 second on / 1 second off) |

**Battery State-of-Charge LED Indications** (when battery is charging):

| | |
|---|---|
| • G on | 80% to 95% SOC |
| • G/Y on | 60% to 80% SOC |
| • Y on | 35% to 60% SOC |
| • Y/R on | 0% to 35% SOC |
| • R on | battery is discharging |

LOAD CONTROL

2. Load Status

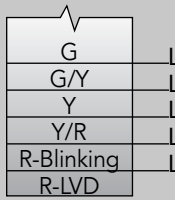


| | | 12V | 24V | 48V |
|---|---|---|---|---|
| G | LVD+ | 0.60V | 1.20V | 2.40V |
| G/Y | LVD+ | 0.45V | 0.90V | 1.80V |
| Y | LVD+ | 0.30V | 0.60V | 1.20V |
| Y/R | LVD+ | 0.15V | 0.30V | 0.60V |
| R-Blinking | LVD | | | |
| R-LVD | | | | |

**The load status LEDs are determined by the LVD voltage plus the specified transition voltages. As the battery voltage rises or falls, each voltage transition will cause a change in the LEDs.**

**3. Faults & Alarms**

| | |
|---|---|
| • Short circuit - solar/load | R/G - Y sequencing |
| • Overload - solar/load | R/Y - G sequencing |
| • Over-temperature | R - Y sequencing |
| • High voltage disconnect | R - G sequencing |
| • Reverse polarity - battery | no LEDs are lighted |
| • Reverse polarity - solar | No fault indication |
| • DIP switch fault | R - Y - G sequencing |
| • Self-test faults | R - Y - G sequencing |
| • Temperature probe (RTS) | R/Y - G/Y sequencing |
| • Battery voltage sense | R/Y - G/Y sequencing |

Appendices

# 12.0 Mounting Template

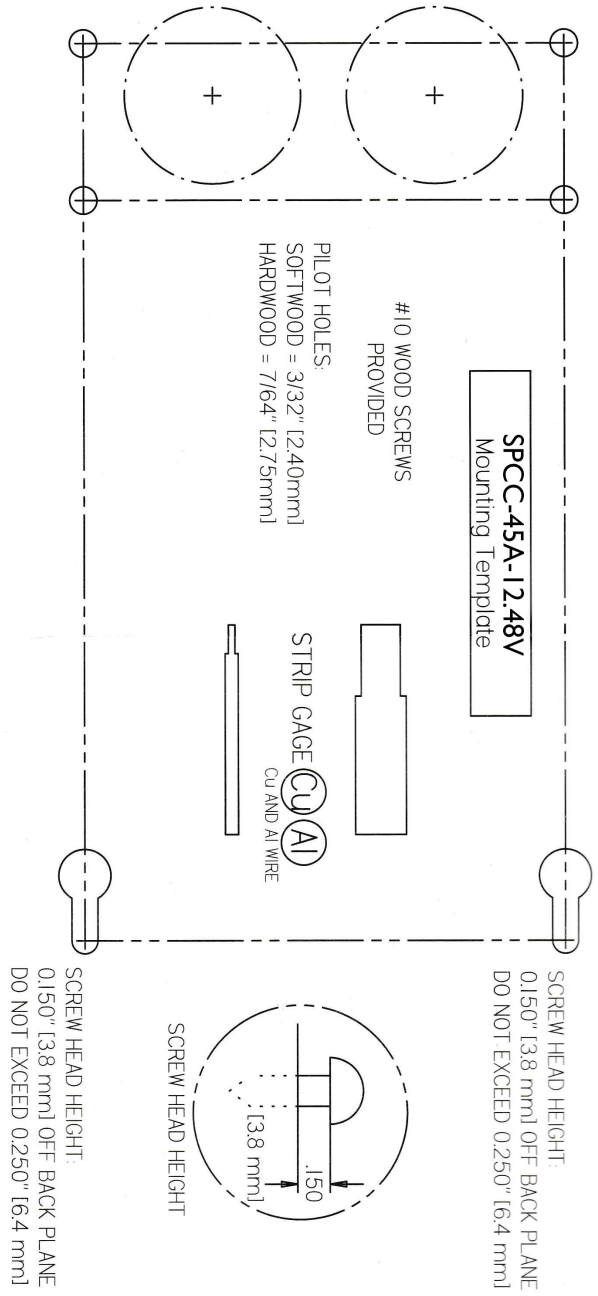




# Certifications

- Complies with ETL UL 1741 and cETL CSA-C22.2 No. 107.1
- Complies with TUV IEC 62109-1
- Complies with the US National Electrical Code
- Complies with the Canadian Electrical Code
- FCC Class B compliant

ENs Directives:

Complies with ENs and LVD standards for CE marking

- Immunity: EN 61000-4-3: 2006
  EN 61000- 4-6: 2009
- Emissions: CISPR 22: 2008
- Safety: EN60335-1, EN60335-2-29 (battery chargers)
  EN 62109-1: 2010

12.0