Shenzhen CTL Testing Technology Co., Ltd.
Tel:+86-755-89486194 E-Mail:ctl@ctl-lab.com

FCC SDoC Test Report

FCC PART 15 Subpart B

Report Reference No.....:	**CTL2006096032-F**
Compiled by (position+printed name+signature)..:	File administrators Tao Pan
Name of the organization performing the tests (position+printed name+signature)..:	Technique principal Ivan Xie
Approved by (position+printed name+signature)..:	Manager Tracy Qi
Date of issue.....:	July 23, 2020
Representative Laboratory Name.:	**Shenzhen CTL Testing Technology Co., Ltd.**
Address.....:	Floor 1-A, Baisha Technology Park, No.3011, Shahexi Road, Nanshan District, Shenzhen, China 518055
Web.....:	www.ctl-lab.com
Test Firm.....:	**Shenzhen CTL Testing Technology Co., Ltd.**
Address.....:	Floor 1-A, Baisha Technology Park, No.3011, Shahexi Road, Nanshan District, Shenzhen, China 518055
Applicant's name.....:	**Yuanyang County Shengyuanxiang Lithium Battery Co., Ltd.,**
Address.....:	No.128, Xincun East Road, Dongjie, Chengguan Town, Yuanyang County, Xinxiang City, Henan Province
Test specification:	
Standard.....:	**FCC PART 15 Subpart B**
TRF Originator.....:	Shenzhen CTL Testing Technology Co., Ltd.

Shenzhen CTL Testing Technology Co., Ltd.

This publication may be reproduced in whole or in part for non-commercial purposes as long as the Shenzhen CTL Testing Technology Co., Ltd. is acknowledged as copyright owner and source of the material. Shenzhen CTL Testing Technology Co., Ltd. takes no responsibility for and will not assume liability for damages resulting from the reader's interpretation of the reproduced material due to its placement and context.

Test item description.....:	**Rechargeable Li-ion Battery Pack**
Trade Mark .....:	N/A
Test voltage.....:	DC 12V
Result.....:	**Pass**

FCC Test Report

Test Report No. :	CTL2006096032-F	July 23, 2020 Date of issue

Equipment under Test	:	Rechargeable Li-ion Battery Pack
Type / Model	:	SYX-12V9AH
Listed Models	:	N/A
Applicant	:	**Yuanyang County Shengyuanxiang Lithium Battery Co., Ltd.,**
Address	:	No.128, Xincun East Road, Dongjie, Chengguan Town, Yuanyang County, Xinxiang City, Henan Province
Manufacturer	:	**Yuanyang County Shengyuanxiang Lithium Battery Co., Ltd.,**
Address	:	No.128, Xincun East Road, Dongjie, Chengguan Town, Yuanyang County, Xinxiang City, Henan Province

Test Result	Pass

The test report merely corresponds to the test sample.
It is not permitted to copy extracts of these test result without the written permission of the test laboratory.

History of this test report

Report No.	Version	Description	Issued Date
CTL2006096032-F	V1.0	Initial Issued Report	July 23, 2020

Content

1. TEST STANDARDS 5

2. SUMMARY 6

2.1. General Remarks 6
2.2. Equipment Under Test 6
2.3. Short description of the Equipment under Test (EUT) 6
2.4. EUT operation mode 6
2.5. EUT configuration 6
2.7. Related Submittal(s) / Grant (s) 7
2.8. Modifications 7
2.9. Test Result Summary 7

3. TEST ENVIRONMENT 8

3.1. Address of the test laboratory 8
3.2. Test Facility 8
3.3. Environmental conditions 8
3.4. Statement of the measurement uncertainty 9
3.5. Equipments Used during the Test 9

4 TEST CONDITIONS AND RESULTS 10

4.1. Radiated Emission Test 10

5. TEST SETUP PHOTOS OF THE EUT 14

6. PHOTOS OF THE EUT 15

1. TEST STANDARDS

The tests were performed according to following standards:

FCC Rules Part 15 Subpart B - Unintentional Radiators

ANSI C63.4-2014

2. SUMMARY

2.1. General Remarks

Date of receipt of test sample : July 22, 2020

Sampling and Testing commenced on : July 22, 2020

Testing concluded on : July 23, 2020

2.2. Equipment Under Test

Power supply system utilised

Power supply voltage : o 120V / 60 Hz o 115V / 60Hz
■ 12 V DC o 24 V DC
o Other (specified in blank below)

/

2.3. Short description of the Equipment under Test (EUT)

Rechargeable Li-ion Battery Pack

For more details, refer to the user's manual of the EUT.

2.4. EUT operation mode

The EUT has been tested under typical operating condition.

2.5. EUT configuration

The following peripheral devices and interface cables were connected during the measurement:

- ● - supplied by the manufacturer
- o - supplied by the lab

2.7. Related Submittal(s) / Grant (s)

This test report is intended for Rechargeable Li-ion Battery Pack filing to comply with the FCC Part 15, Subpart B Rules.

2.8. Modifications

No modifications were implemented to meet testing criteria.

2.9. Test Result Summary

Test Item	Test Requirement	Standard Paragrph	Result
Radiated Emission	FCC PART 15 Subpart B	Section 15.109	PASS

3. TEST ENVIRONMENT

3.1. Address of the test laboratory

Shenzhen CTL Testing Technology Co., Ltd.
Floor 1-A, Baisha Technology Park, No. 3011, Shahexi Road, Nanshan, Shenzhen 518055 China

3.2. Test Facility

The test facility is recognized, certified, or accredited by the following organizations:

IC Registration No.: 9618B

The 3m alternate test site of Shenzhen CTL Testing Technology Co., Ltd. EMC Laboratory has been registered by Certification and Engineer Bureau of Industry Canada for the performance of with Registration No.: 9618B on November 13, 2013.

FCC-Registration No.: 399832

Shenzhen CTL Testing Technology Co., Ltd. EMC Laboratory has been registered and fully described in a report filed with the (FCC) Federal Communications Commission. The acceptance letter from the FCC is maintained in our files. Registration 399832, December 08, 2017.

Certificated by A2LA, USA
Registration No.:4343.01
Date of registration: December 27, 2017

3.3. Environmental conditions

During the measurement the environmental conditions were within the listed ranges:

Temperature:	15-35 ° C
Humidity:	30-60 %
Atmospheric pressure:	950-1050mbar

3.4. Statement of the measurement uncertainty

The data and results referenced in this document are true and accurate. The reader is cautioned that there may be errors within the calibration limits of the equipment and facilities. The measurement uncertainty was calculated for all measurements listed in this test report acc. to CISPR 16 - 4 „Specification for radio disturbance and immunity measuring apparatus and methods – Part 4: Uncertainty in EMC Measurements“ and is documented in the Shenzhen CTL Testing Technology Co., Ltd quality system acc. to DIN EN ISO/IEC 17025. Furthermore, component and process variability of devices similar to that tested may result in additional deviation. The manufacturer has the sole responsibility of continued compliance of the device.

Hereafter the best measurement capability for CTL laboratory is reported:

Test	Range	Measurement Uncertainty	Notes
Radiated Emission(chamber 1)	30~1000MHz	±3.20dB	(1)
Radiated Emission(chamber 2)	30~1000MHz	±3.53dB	(1)
Radiated Emission	Above 1GHz	±4.32dB	(1)
Conducted Emission	0.15~30MHz	±2.66dB	(1)
Disturbance Power	30~300MHz	±2.90dB	(1)

(1) This uncertainty represents an expanded uncertainty expressed at approximately the 95% confidence level using a coverage factor of k=2.

3.5. Equipments Used during the Test

Radiated Emission(chamber 1)						
Item	Test Equipment	Manufacturer	Model No.	Serial No.	Last Cal.	Cal.Due
1	ULTRA-BROADBAND ANTENNA	Sunol Sciences Corp.	JB1 Antenna	A061713	2020/04/08	2023/04/07
2	EMI Test Receiver	ROHDE & SCHWARZ	ESCI	1166.5950.03	2020/05/18	2021/05/17
3	Horn Antenna	Sunol Sciences Corp	DRH-118	A062013	2020/05/23	2021/05/22
Software:						
Name of Software:				Version:		
ES-K1(Below 1GHz)				V1.71		
e3(Above 1GHz)				6.111221a		

4 TEST CONDITIONS AND RESULTS

4.1. Radiated Emission Test

TEST CONFIGURATION

(A) Radiated Emission Test Set-Up, Frequency Below 30MHz

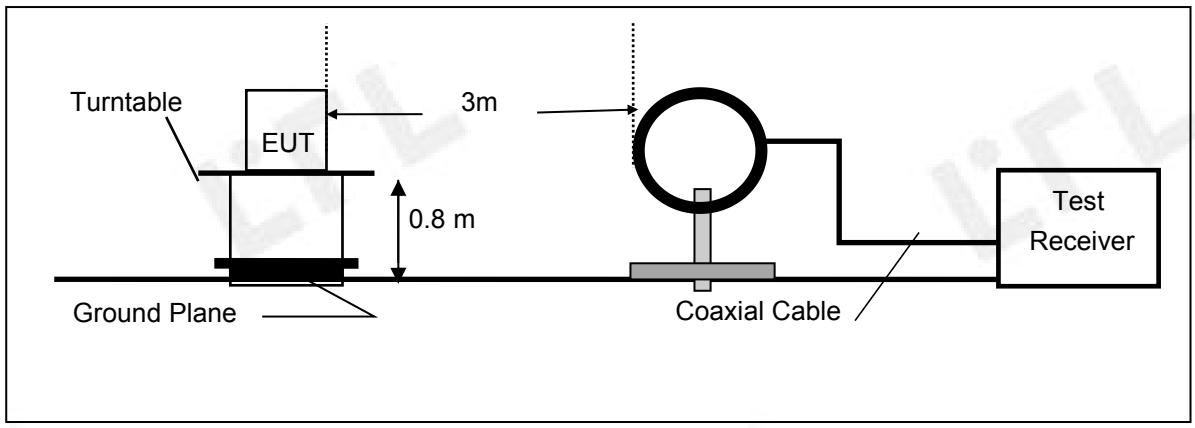

(B) Radiated Emission Test Set-Up, Frequency below 1000MHz

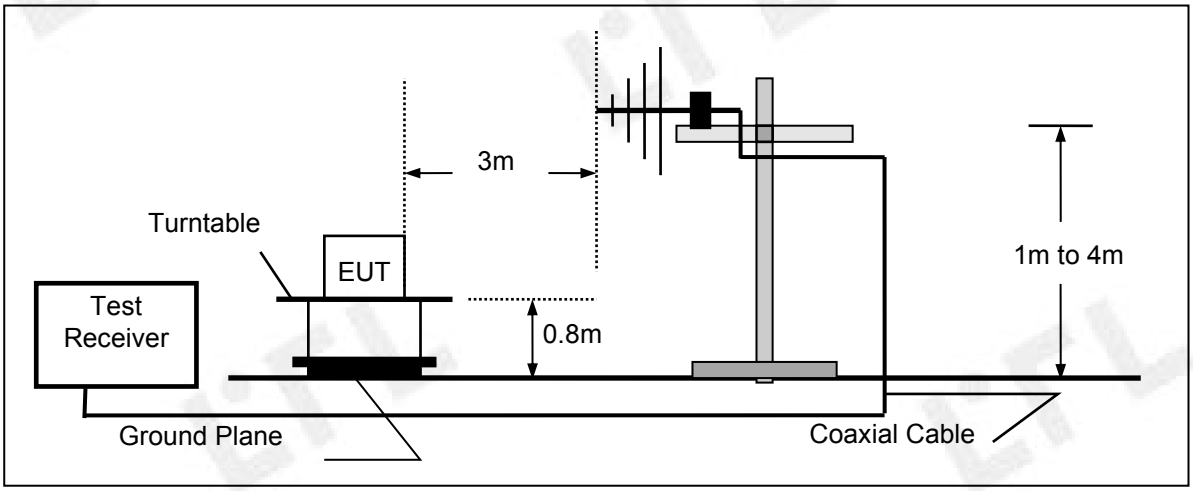

(C) Radiated Emission Test Set-Up, Frequency above 1000MHz

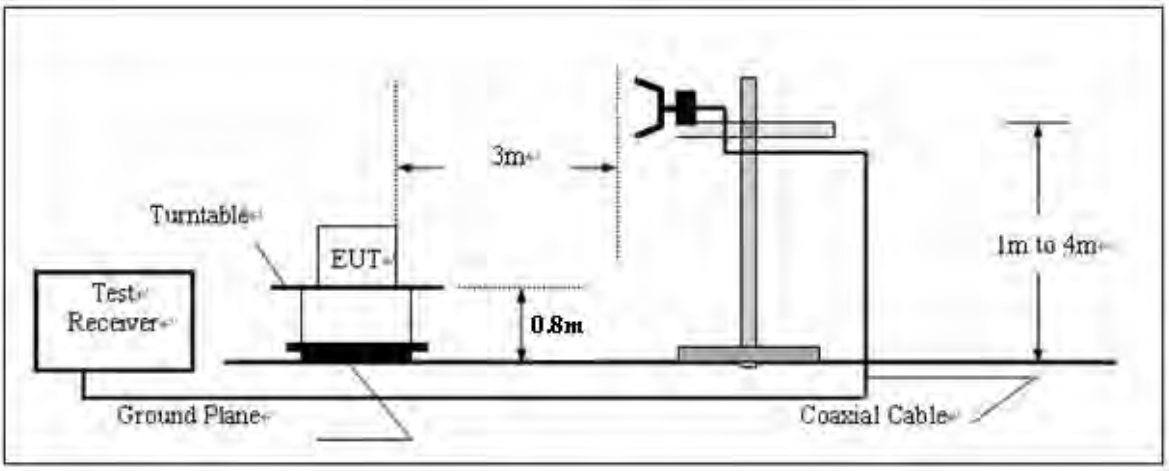

Field Strength Calculation

The field strength is calculated by adding the Antenna Factor and Cable Factor and subtracting the Amplifier Gain and Duty Cycle Correction Factor(if any) from the measured reading. The basic equation with a sample calculation is as follows:

FS = RA + AF + CL - AG

Where FS = Field Strength	CL = Cable Attenuation Factor (Cable Loss)
RA = Reading Amplitude	AG = Amplifier Gain
AF = Antenna Factor	

RADIATION LIMIT

For unintentional device, according to § 15.109(a), except for Class A digital devices, the field strength of radiated emissions from unintentional radiators at a distance of 3 meters shall not exceed the following values：

Frequency (MHz)	Distance (Meters)	Radiated (dBμV/m)	Radiated (μV/m)
30-88	3	40.0	100
88-216	3	43.5	150
216-960	3	46.0	200
Above 960	3	54.0	500

For intentional device, according to § 15.209(a), the general requirement of field strength of radiated emissions from intentional radiators at a distance of 3 meters shall not exceed the above table.

Test Procedure

1. The EUT is placed on a turntable, which is 0.8m above ground plane.
2. The turntable shall be rotated for 360 degrees to determine the position of maximum emission level.
3. EUT is set 3m away from the receiving antenna, which is varied from 1m to 4m to find out the highest emissions.
4. Maximum procedure was performed on the six highest emissions to ensure EUT compliance.
5. And also, each emission was to be maximized by changing the polarization of receiving antenna both horizontal and vertical.
6. Repeat above procedures until the measurements for all frequencies are complete.

Radiation Test Results

Shenzhen CTL Testing Technology Co.,Ltd

Radiation Emission Test FCC PART 15 B

```
EUT:                  SYX-12V9AH
Manufacturer:         Yuanyang County Shengyuanxiang Lithium Battery Co., Ltd.,
Operating Condition:  Discharging
Test Site:            Chamber1
Operator:             ZGH
Test Specification:   DC 12V
Comment:              /
Start of Test:        2020-7-22 / 9:39:01
```

SWEEP TABLE: "test (30M-1G)"

Short Description:			Field Strength		
Start Frequency	Stop Frequency	Detector	Meas. Time	IF Bandw.	Transducer
30.0 MHz	1.0 GHz	MaxPeak	300.0 ms	100 kHz	JB1

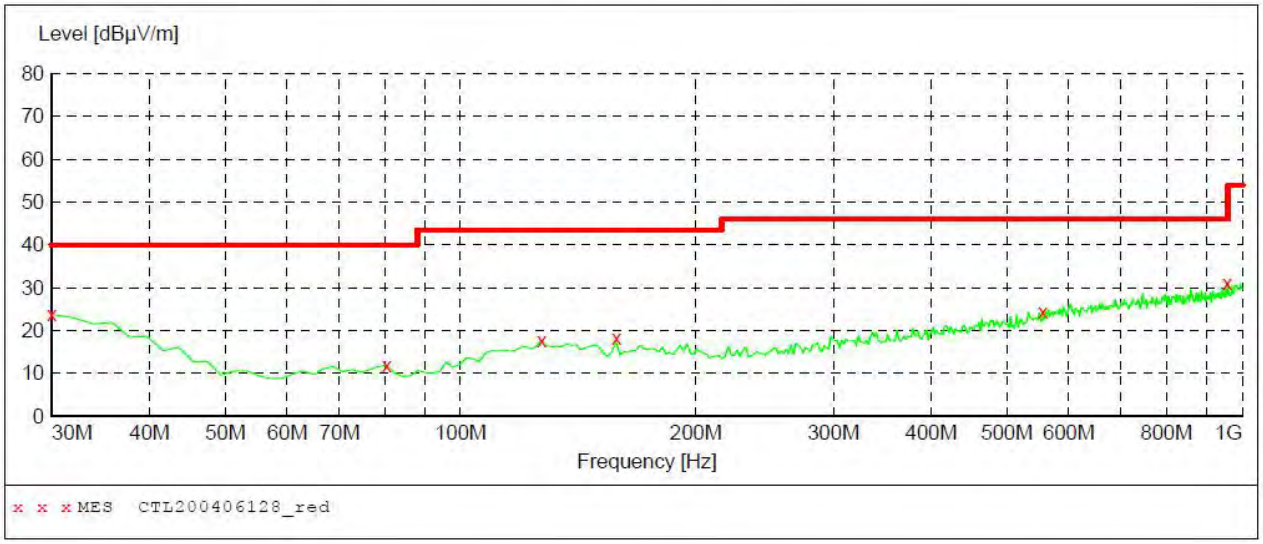

MEASUREMENT RESULT: "CTL200722128_red"

2020-7-22 9:39

Frequency MHz	Level dBµV/m	Transd dB	Limit dBµV/m	Margin dB	Det.	Height cm	Azimuth deg	Polarization
30.000000	23.70	22.2	40.0	16.3	---	0.0	0.00	HORIZONTAL
80.440000	11.90	9.0	40.0	28.1	---	0.0	0.00	HORIZONTAL
127.000000	17.80	15.3	43.5	25.7	---	0.0	0.00	HORIZONTAL
166.900000	17.90	14.7	43.5	25.6	---	0.0	0.00	HORIZONTAL
555.740000	24.50	22.0	46.0	21.5	---	0.0	0.00	HORIZONTAL
957.320000	31.20	27.5	46.0	14.8	---	0.0	0.00	HORIZONTAL

Shenzhen CTL Testing Technology Co.,Ltd

Radiation Emission Test FCC PART 15 B

```
EUT:                    SYX-12V9AH
Manufacturer:           Yuanyang County Shengyuanxiang Lithium Battery Co., Ltd.,
Operating Condition:    Discharging
Test Site:              Chamber1
Operator:               ZGH
Test Specification:     DC 12V
Comment:                /
Start of Test:          2020-7-22 / 9:39:35
```

SWEEP TABLE: "test (30M-1G)"

Short Description:			Field Strength		
Start Frequency	Stop Frequency	Detector	Meas. Time	IF Bandw.	Transducer
30.0 MHz	1.0 GHz	MaxPeak	300.0 ms	100 kHz	JB1

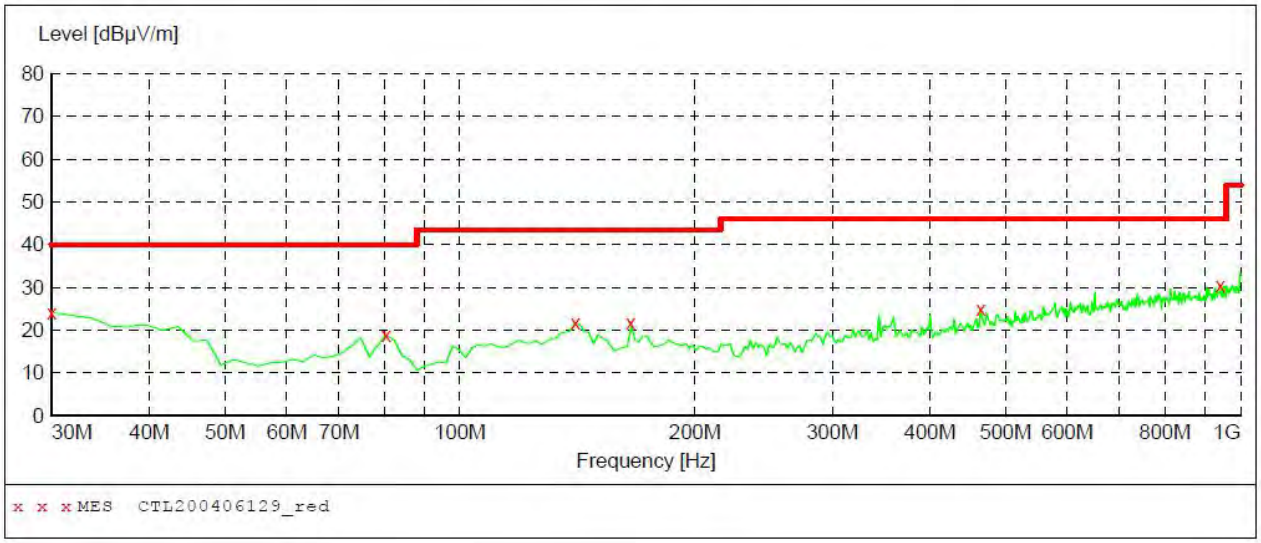

MEASUREMENT RESULT: "CTL200722129_red"

2020-7-22 9:39

Frequency MHz	Level dBµV/m	Transd dB	Limit dBµV/m	Margin dB	Det.	Height cm	Azimuth deg	Polarization
30.000000	24.10	22.2	40.0	15.9	---	0.0	0.00	VERTICAL
80.440000	18.80	9.0	40.0	21.2	---	0.0	0.00	VERTICAL
140.580000	21.80	14.8	43.5	21.7	---	0.0	0.00	VERTICAL
169.560000	21.60	14.5	43.5	21.9	---	0.0	0.00	VERTICAL
464.560000	25.10	19.8	46.0	20.9	---	0.0	0.00	VERTICAL
941.800000	30.60	27.1	46.0	15.4	---	0.0	0.00	VERTICAL

5. Test Setup Photos of the EUT



6. Photos of the EUT

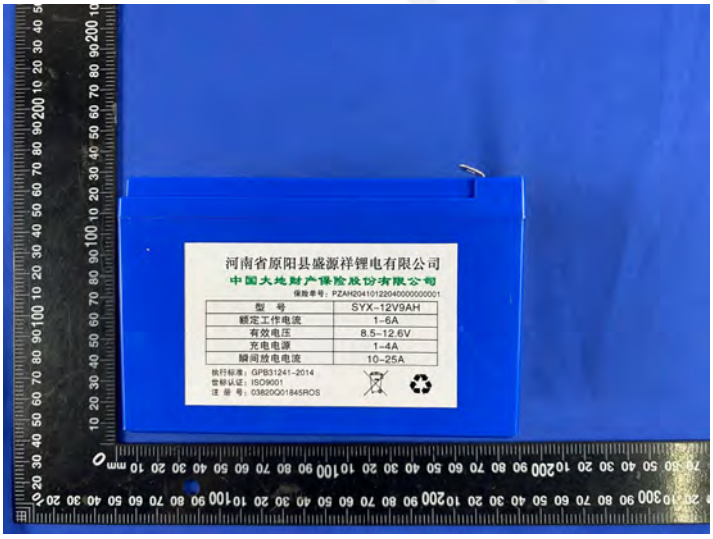

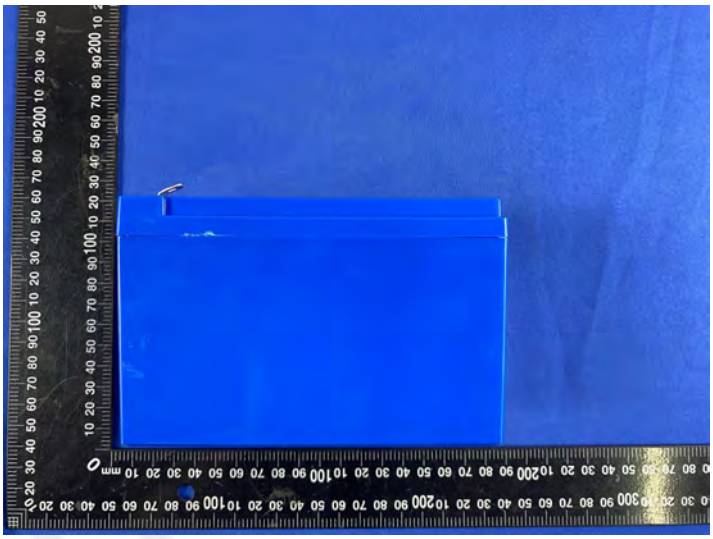

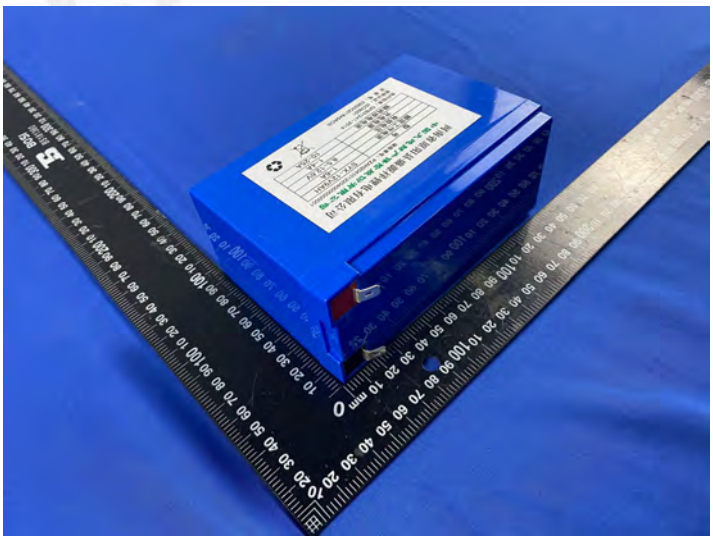

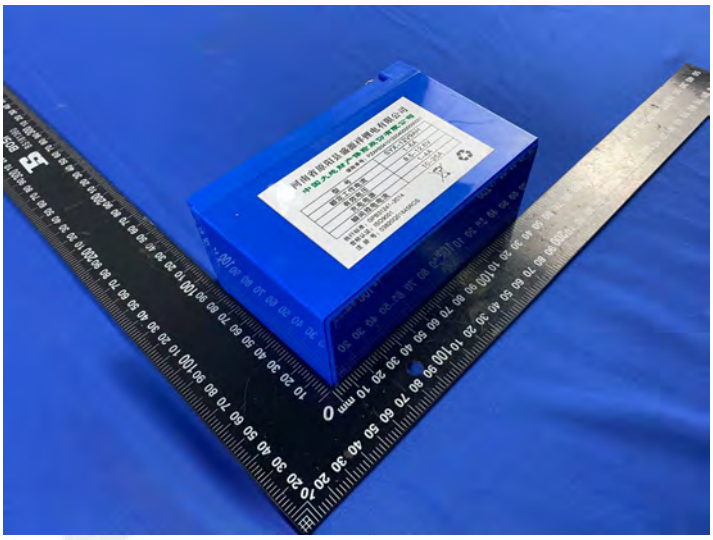

.....End of Report.....