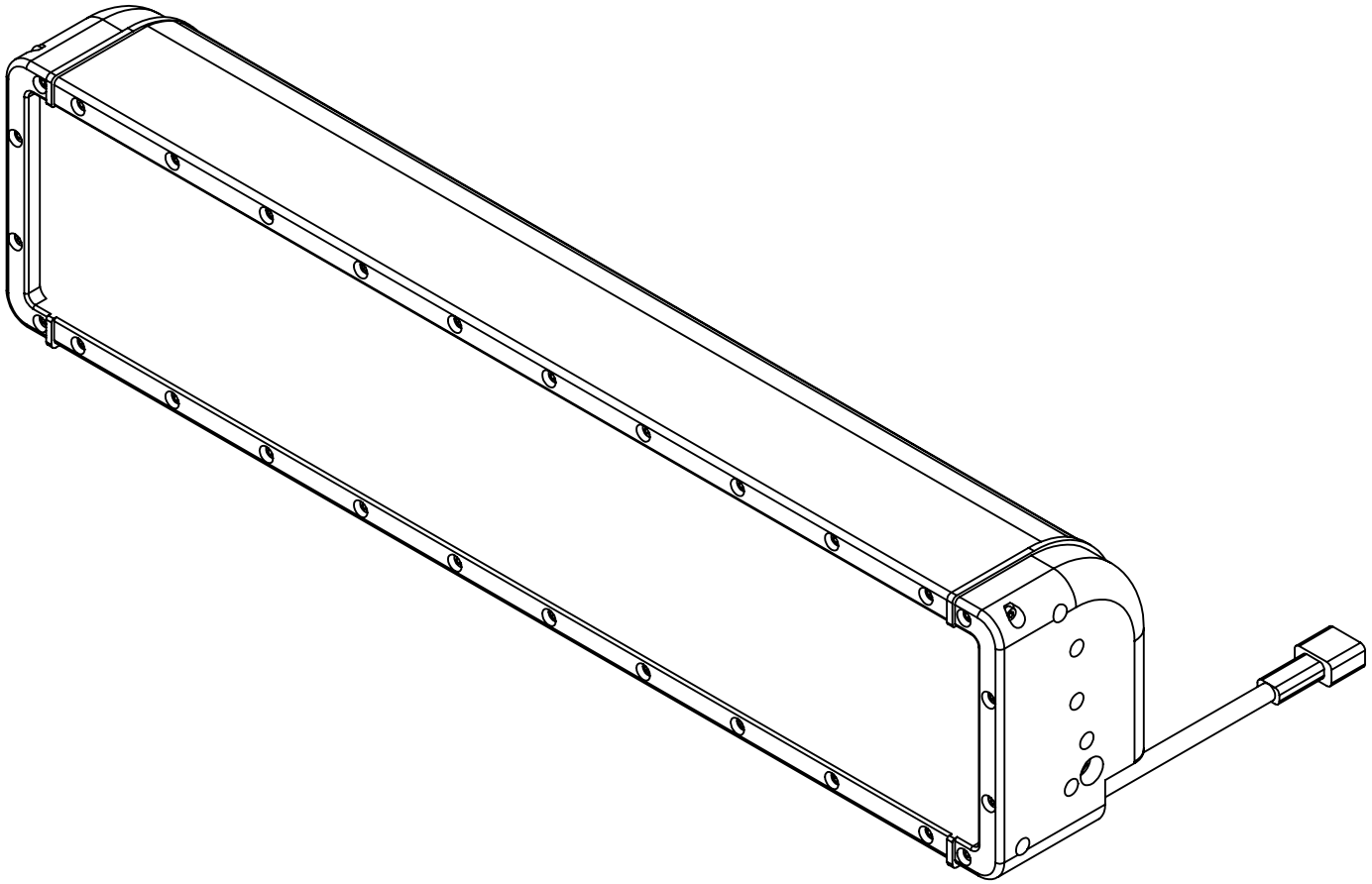

LARSON ELECTRONICS

TITLE:

LEDLB-80X2E-UV-365NM

PROPRIETARY AND CONFIDENTIAL
THE INFORMATION CONTAINED IN THIS DRAWING IS THE SOLE PROPERTY OF LARSON ELECTRONICS LLC. ANY REPRODUCTION IN PART OR AS A WHOLE WITHOUT THE WRITTEN PERMISSION OF LARSON ELECTRONICS LLC IS PROHIBITED.

UNLESS OTHERWISE NOTED:
ANGLE: +/- .5
.X +/- .02
.XX +/- .01
.XXX +/- .005

DIMENSIONS ARE IN INCHES			NAME
Quantity	1	DRAWN	Luis Martinez
MATERIAL		CHECKED	N/A
DO NOT SCALE DRAWING		DATE	04/07/2017

SIZE	DWG. NO.	REV
A		00

SCALE: NTS

5 4 3 2 1

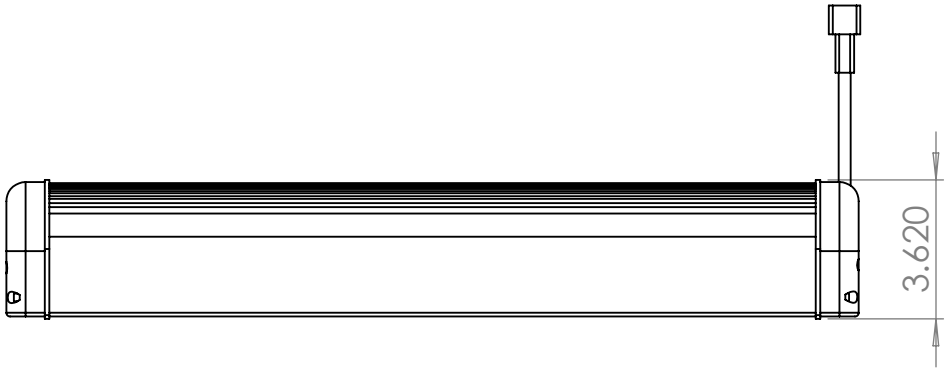

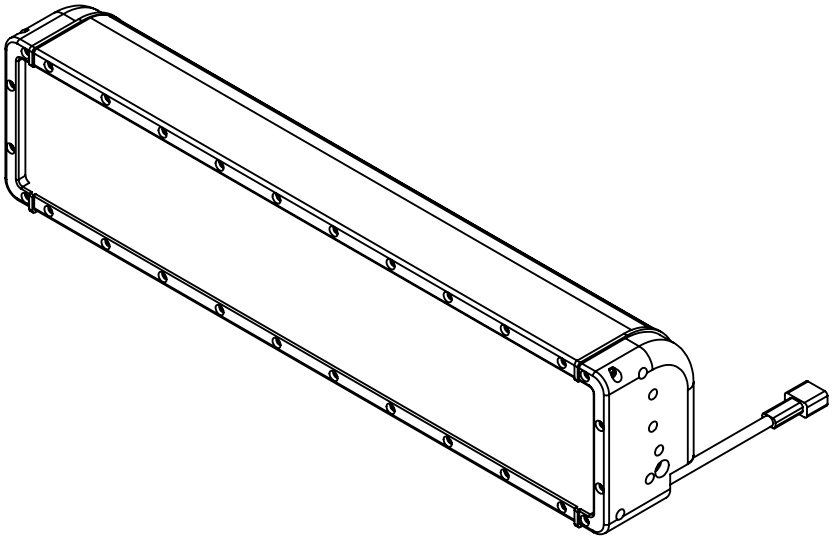

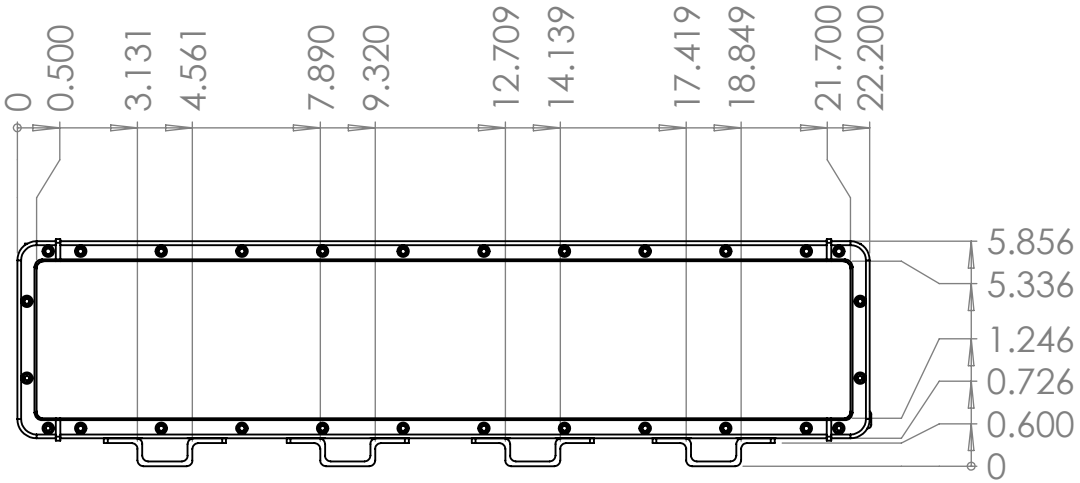

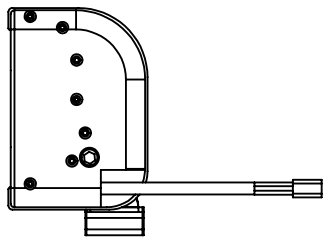

LARSON ELECTRONICS

TITLE:

LEDLB-80X2E-UV-365NM

PROPRIETARY AND CONFIDENTIAL
THE INFORMATION CONTAINED IN THIS DRAWING IS THE SOLE PROPERTY OF LARSON ELECTRONICS LLC. ANY REPRODUCTION IN PART OR AS A WHOLE WITHOUT THE WRITTEN PERMISSION OF LARSON ELECTRONICS LLC IS PROHIBITED.

UNLESS OTHERWISE NOTED:
ANGLE: +/- .5
.X +/- .02
.XX +/- .01
.XXX +/- .005

DIMENSIONS ARE IN INCHES			NAME
Quantity	1	DRAWN	Luis Martinez
MATERIAL		CHECKED	N/A
DO NOT SCALE DRAWING		DATE	04/07/2017

SIZE	DWG. NO.	REV
A		00

SCALE: NTS SHEET 2 OF 3

5 4 3 2 1

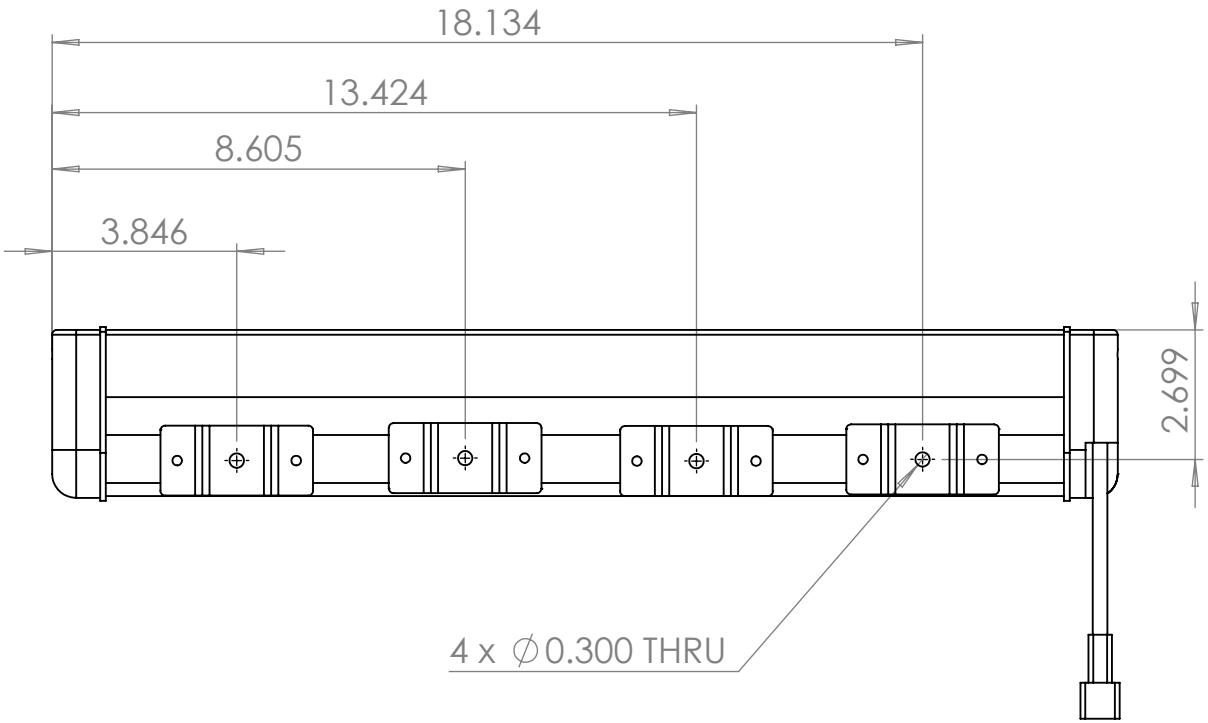

LARSON ELECTRONICS

TITLE:

LEDLB-80X2E-UV-365NM

PROPRIETARY AND CONFIDENTIAL
THE INFORMATION CONTAINED IN THIS DRAWING IS THE SOLE PROPERTY OF LARSON ELECTRONICS LLC. ANY REPRODUCTION IN PART OR AS A WHOLE WITHOUT THE WRITTEN PERMISSION OF LARSON ELECTRONICS LLC IS PROHIBITED.

UNLESS OTHERWISE NOTED:
ANGLE: +/- .5
.X +/- .02
.XX +/- .01
.XXX +/- .005

DIMENSIONS ARE IN INCHES			NAME
Quantity	1	DRAWN	Luis Martinez
MATERIAL		CHECKED	N/A
DO NOT SCALE DRAWING		DATE	04/07/2017

SIZE	DWG. NO.	REV
A		00

SCALE: NTS

SHEET 3 OF 3

5 4 3 2 1