

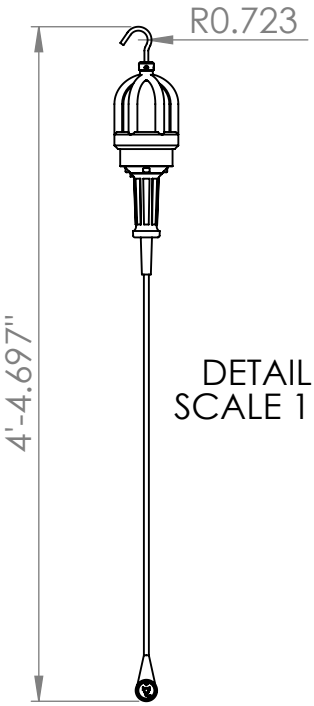

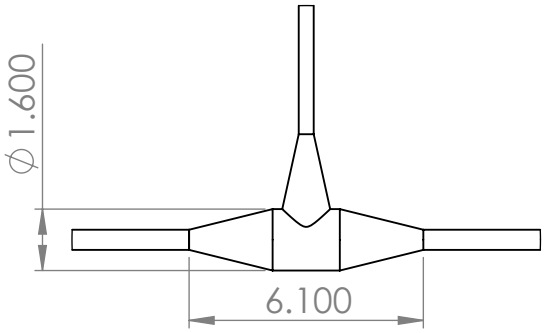

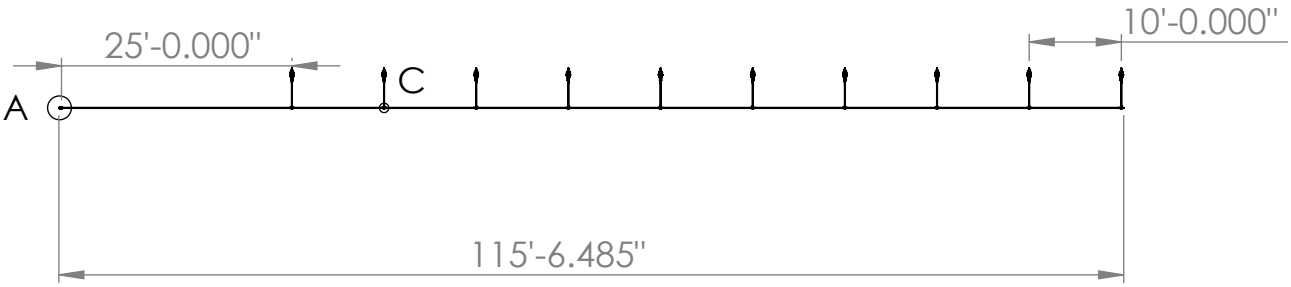

DETAIL C
SCALE 1 : 5

Larson Electronics

PROPRIETARY AND CONFIDENTIAL
THE INFORMATION CONTAINED IN THIS DRAWING IS THE SOLE PROPERTY OF LARSON ELECTRONICS. ANY REPRODUCTION IN PART OR AS A WHOLE WITHOUT THE WRITTEN PERMISSION OF LARSON ELECTRONICS IS PROHIBITED.

NEXT ASSY	USED ON
APPLICATION	

DIMENSIONS ARE IN INCHES
TOLERANCES:
FRACTIONAL ±
ANGULAR: MACH ± BEND ±
TWO PLACE DECIMAL ±
THREE PLACE DECIMAL ±

MATERIAL

FINISH

DO NOT SCALE DRAWING

	NAME
DRAWN	JOSH DREDLA
CHECKED	
ENG APPR.	
MFG APPR.	
Q.A.	

COMMENTS:

EPL-SL-10

SIZE	DWG. NO.	REV.
A		
SCALE:1:250	WEIGHT:	SHEET 1 OF 1

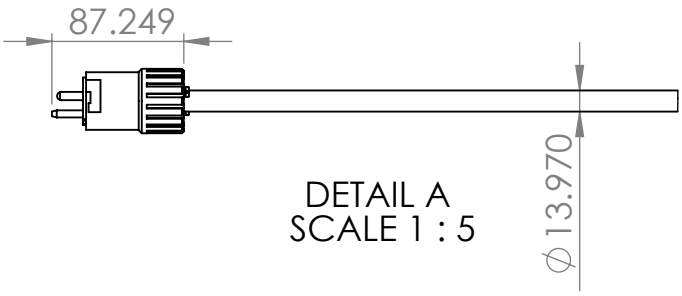

DETAIL A
SCALE 1 : 5

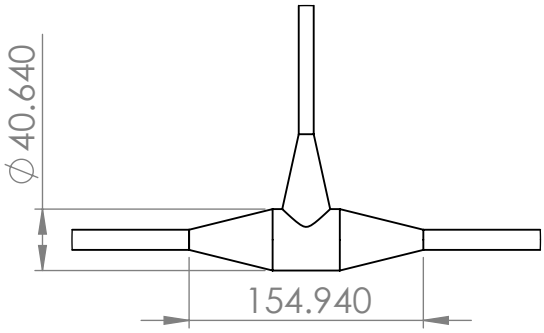

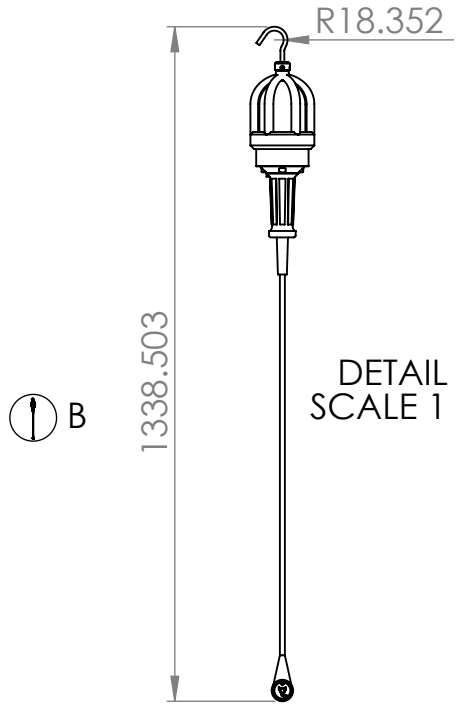

DETAIL B
SCALE 1 : 15

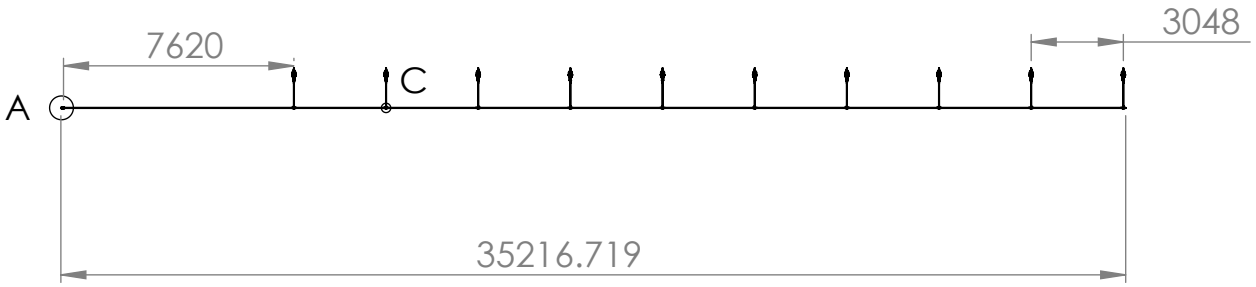

DETAIL C
SCALE 1 : 5

Larson Electronics

PROPRIETARY AND CONFIDENTIAL
THE INFORMATION CONTAINED IN THIS DRAWING IS THE SOLE PROPERTY OF LARSON ELECTRONICS. ANY REPRODUCTION IN PART OR AS A WHOLE WITHOUT THE WRITTEN PERMISSION OF LARSON ELECTRONICS IS PROHIBITED.

NEXT ASSY	USED ON
APPLICATION	

DIMENSIONS ARE IN INCHES
TOLERANCES:
FRACTIONAL ±
ANGULAR: MACH ± BEND ±
TWO PLACE DECIMAL ±
THREE PLACE DECIMAL ±

MATERIAL

FINISH

DO NOT SCALE DRAWING

	NAME
DRAWN	JOSH DREDLA
CHECKED	
ENG APPR.	
MFG APPR.	
Q.A.	

COMMENTS:

EPL-SL-10

SIZE	DWG. NO.	REV.
A		
SCALE:1:250	WEIGHT:	SHEET 1 OF 1

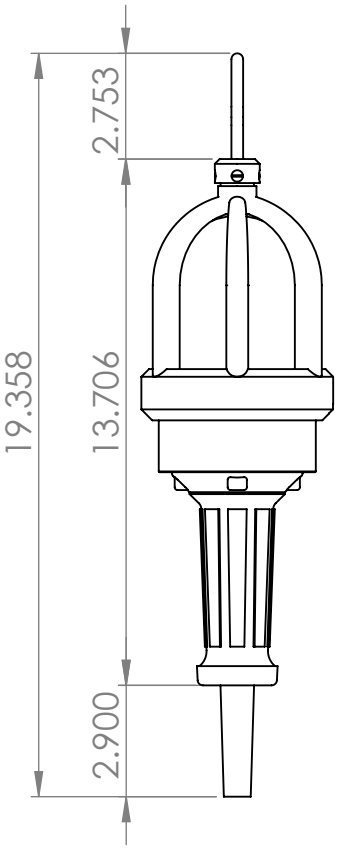

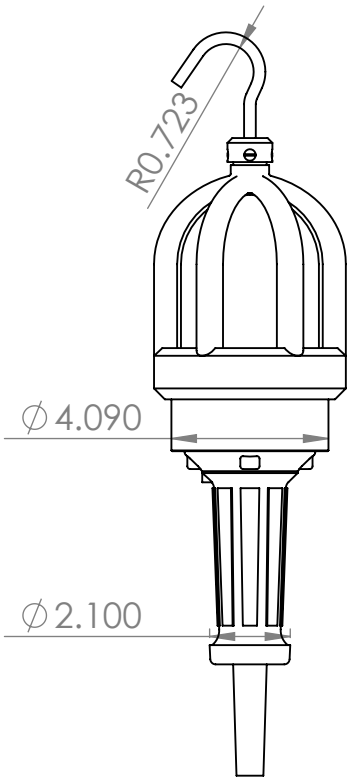

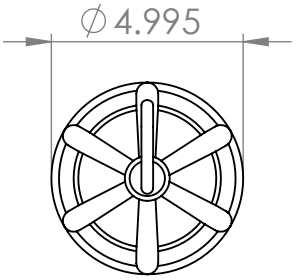

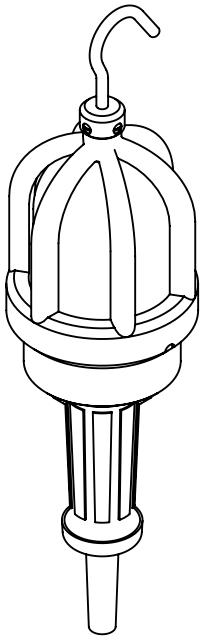

Larson Electronics

PROPRIETARY AND CONFIDENTIAL

THE INFORMATION CONTAINED IN THIS DRAWING IS THE SOLE PROPERTY OF LARSON ELECTRONICS. ANY REPRODUCTION IN PART OR AS A WHOLE WITHOUT THE WRITTEN PERMISSION OF LARSON ELECTRONICS IS PROHIBITED.

NEXT ASSY	USED ON
APPLICATION	

DIMENSIONS ARE IN INCHES
TOLERANCES:
FRACTIONAL ±
ANGULAR: MACH ± BEND ±
TWO PLACE DECIMAL ±
THREE PLACE DECIMAL ±

MATERIAL

FINISH

DO NOT SCALE DRAWING

	NAME
DRAWN	JOSH DREDLA
CHECKED	
ENG APPR.	
MFG APPR.	
Q.A.	

COMMENTS:

EPL-120V-DW

SIZE	DWG. NO.	REV.
A		

SCALE:1:5	WEIGHT:	SHEET 1 OF 1

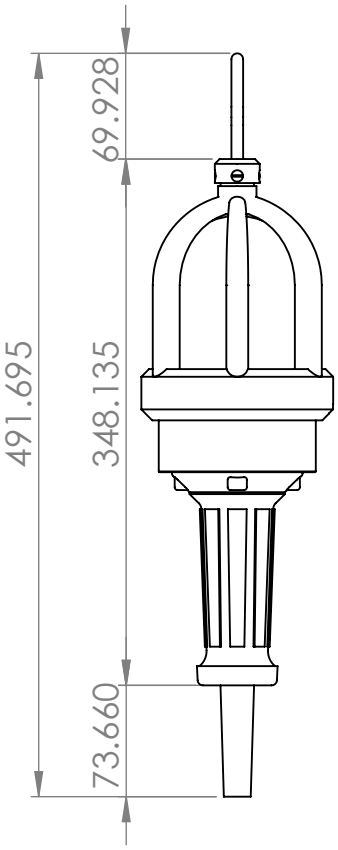

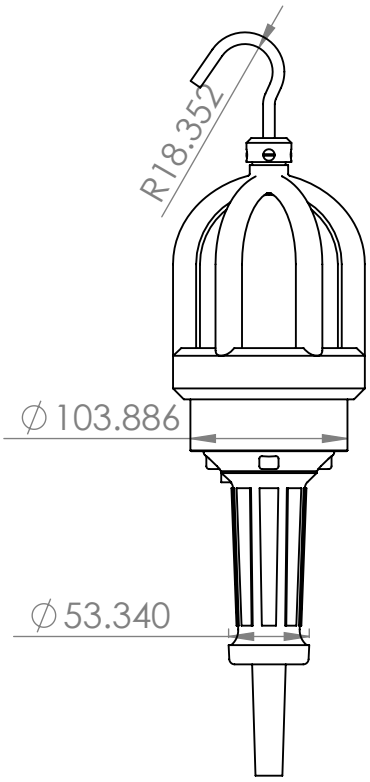

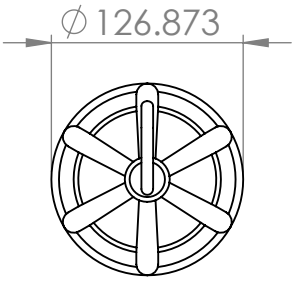

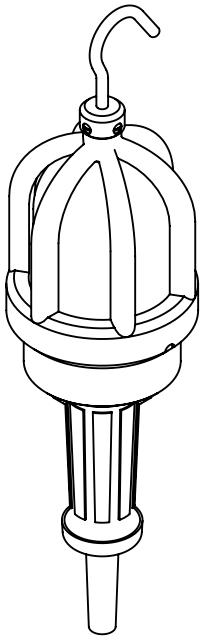

Larson Electronics

PROPRIETARY AND CONFIDENTIAL

THE INFORMATION CONTAINED IN THIS DRAWING IS THE SOLE PROPERTY OF LARSON ELECTRONICS. ANY REPRODUCTION IN PART OR AS A WHOLE WITHOUT THE WRITTEN PERMISSION OF LARSON ELECTRONICS IS PROHIBITED.

NEXT ASSY	USED ON
APPLICATION	

DIMENSIONS ARE IN INCHES
TOLERANCES:
FRACTIONAL ±
ANGULAR: MACH ± BEND ±
TWO PLACE DECIMAL ±
THREE PLACE DECIMAL ±

MATERIAL

FINISH

DO NOT SCALE DRAWING

	NAME
DRAWN	JOSH DREDLA
CHECKED	
ENG APPR.	
MFG APPR.	
Q.A.	

COMMENTS:

EPL-120V-DW

SIZE	DWG. NO.	REV.
A		
SCALE:1:5	WEIGHT:	SHEET 1 OF 1

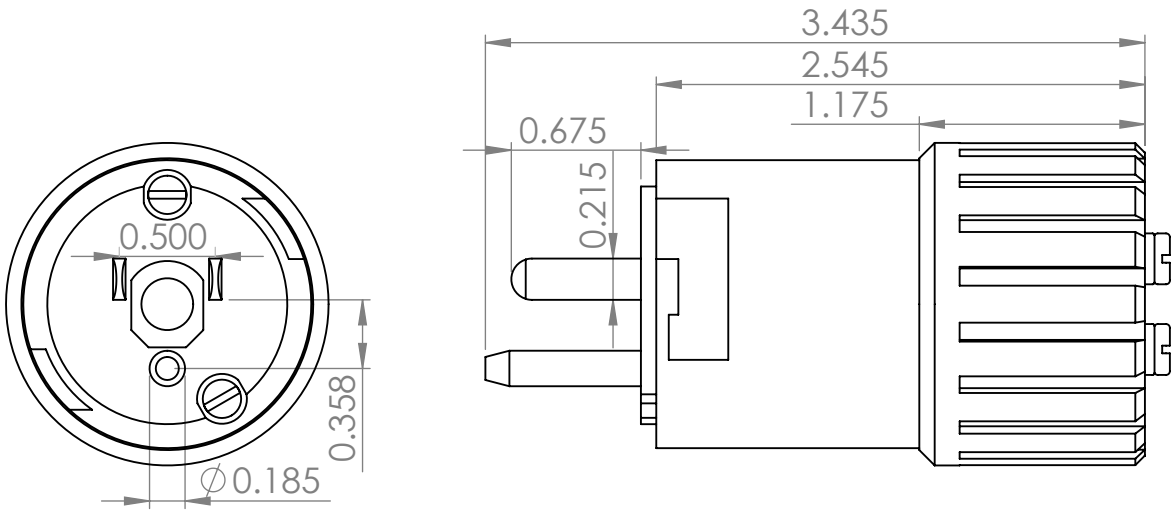

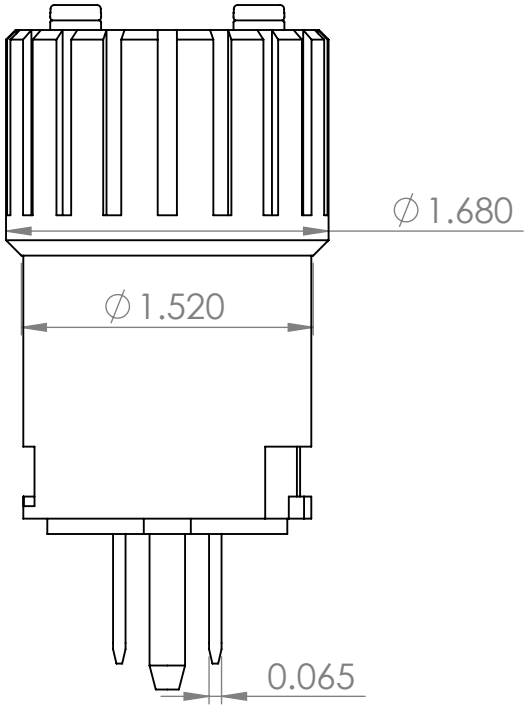

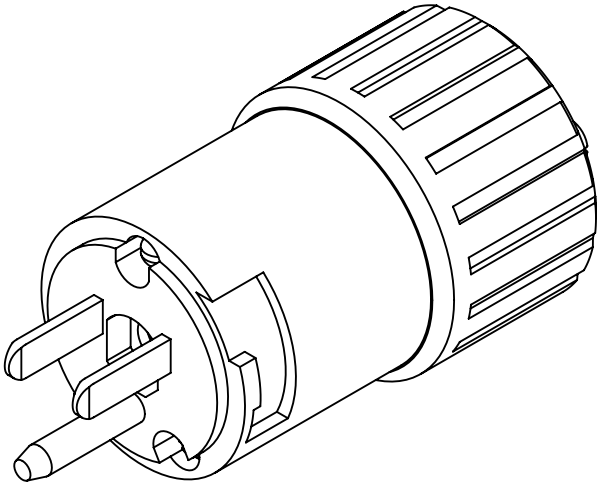

Larson Electronics

		DIMENSIONS ARE IN INCHES TOLERANCES: FRACTIONAL ± ANGULAR: MACH ± BEND ± TWO PLACE DECIMAL ± THREE PLACE DECIMAL ±		NAME	
			DRAWN	JOSH DREDLA	
			CHECKED		
			ENG APPR.		
			MFG APPR.		
		MATERIAL	Q.A.		
NEXT ASSY	USED ON	FINISH	COMMENTS:		
APPLICATION		DO NOT SCALE DRAWING			

PROPRIETARY AND CONFIDENTIAL

THE INFORMATION CONTAINED IN THIS DRAWING IS THE SOLE PROPERTY OF LARSON ELECTRONICS. ANY REPRODUCTION IN PART OR AS A WHOLE WITHOUT THE WRITTEN PERMISSION OF LARSON ELECTRONICS IS PROHIBITED.

EPP-15A

SIZE	DWG. NO.	REV.
A		
SCALE:1:1	WEIGHT:	SHEET 1 OF 1

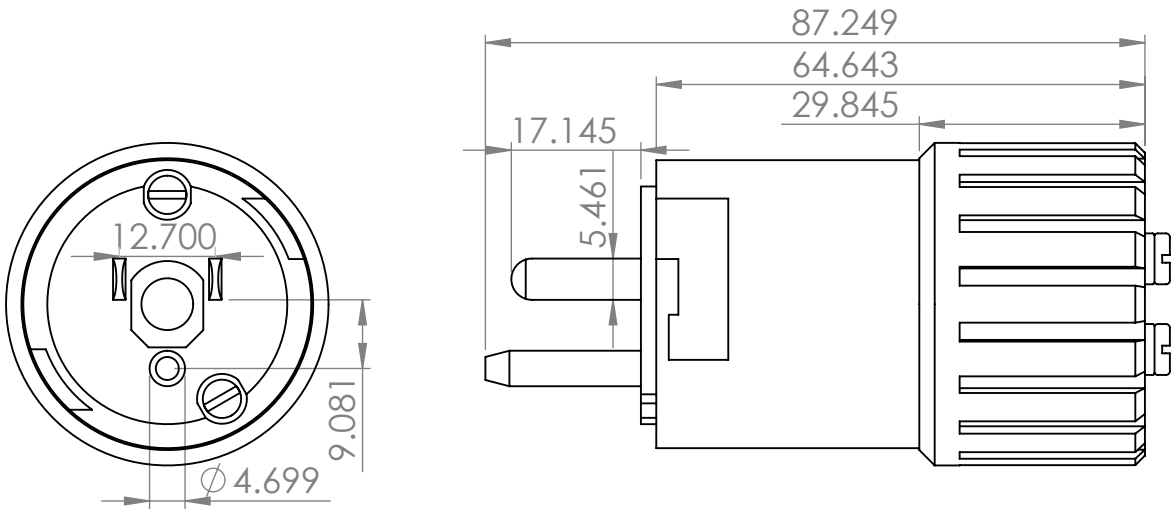

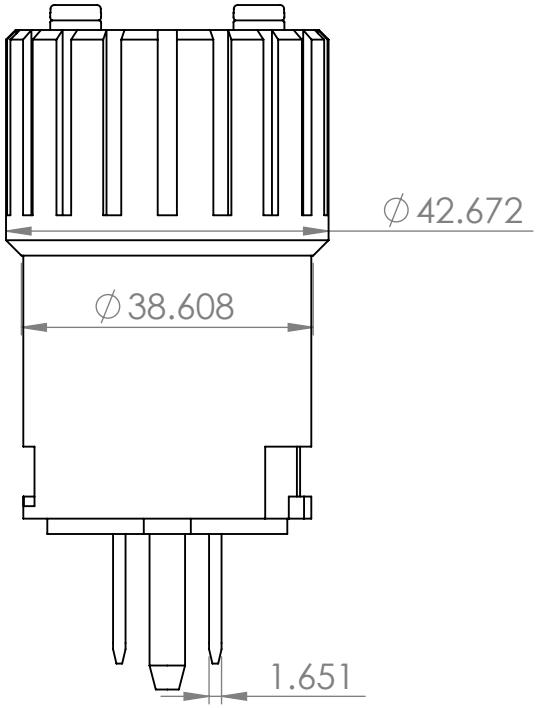

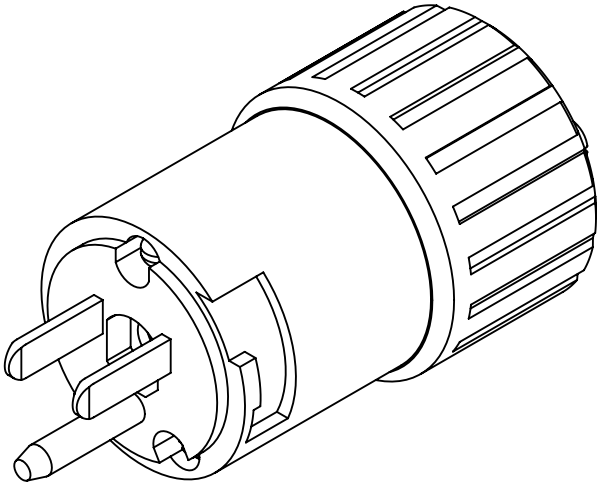

Larson Electronics

PROPRIETARY AND CONFIDENTIAL

THE INFORMATION CONTAINED IN THIS DRAWING IS THE SOLE PROPERTY OF LARSON ELECTRONICS. ANY REPRODUCTION IN PART OR AS A WHOLE WITHOUT THE WRITTEN PERMISSION OF LARSON ELECTRONICS IS PROHIBITED.

NEXT ASSY	USED ON
APPLICATION	

DIMENSIONS ARE IN INCHES
TOLERANCES:
FRACTIONAL ±
ANGULAR: MACH ± BEND ±
TWO PLACE DECIMAL ±
THREE PLACE DECIMAL ±

MATERIAL

FINISH

DO NOT SCALE DRAWING

	NAME
DRAWN	JOSH DREDLA
CHECKED	
ENG APPR.	
MFG APPR.	
Q.A.	

COMMENTS:

EPP-15A

SIZE	DWG. NO.	REV.
A		
SCALE:1:1	WEIGHT:	SHEET 1 OF 1