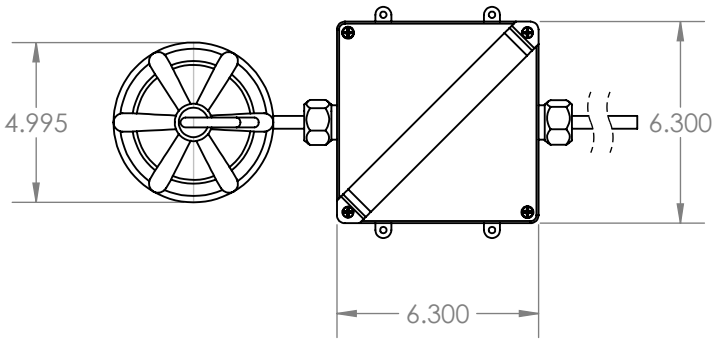


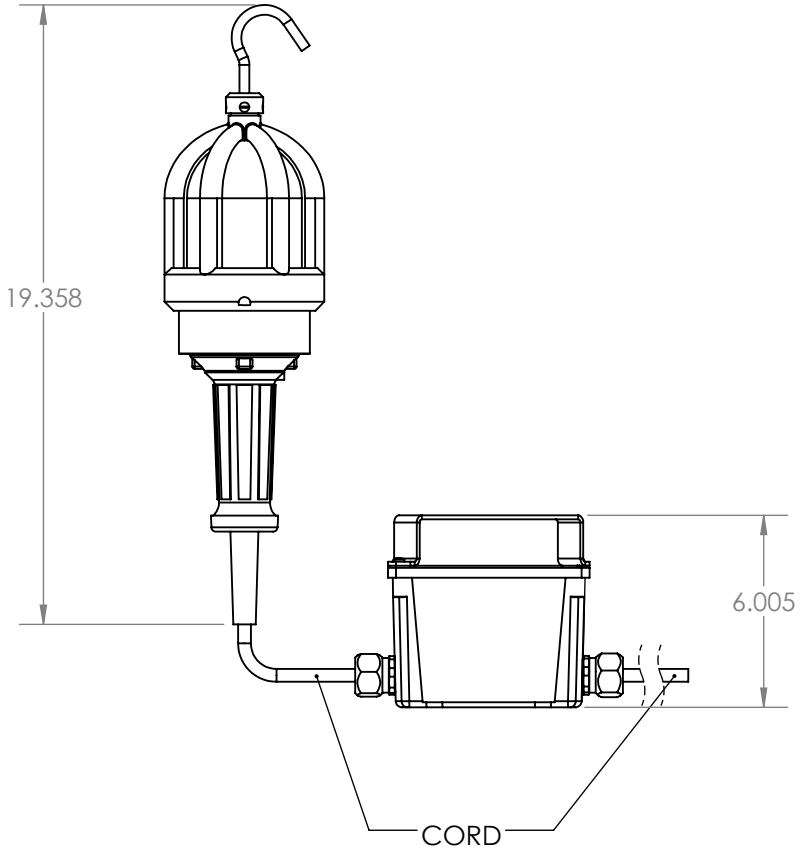


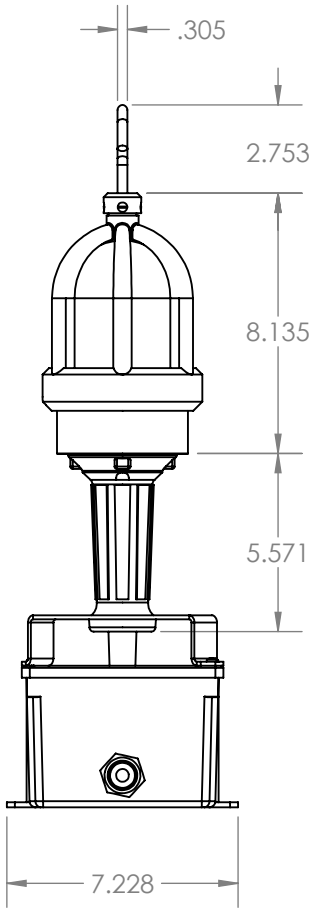


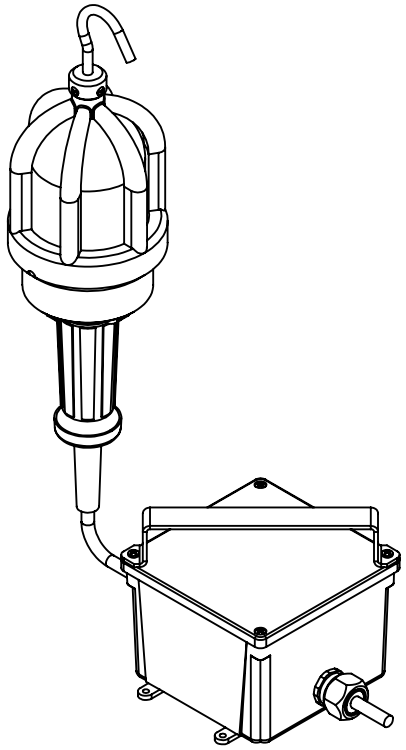

LARSON ELECTRONICS

TITLE:

# EPL-220X Series

**PROPRIETARY AND CONFIDENTIAL**
THE INFORMATION CONTAINED IN THIS DRAWING IS THE SOLE PROPERTY OF LARSON ELECTRONICS LLC. ANY REPRODUCTION IN PART OR AS A WHOLE WITHOUT THE WRITTEN PERMISSION OF LARSON ELECTRONICS LLC IS PROHIBITED.

| | | NAME |
|---|---|---|
| DIMENSIONS ARE IN INCHES | DRAWN | CHRIS THAUER |
| MATERIAL | CHECKED | JEREMY BLANKENSHIP |
| DO NOT SCALE DRAWING | | |

| SIZE | DWG. NO. | REV |
|---|---|---|
| A | | |

SCALE: 1:6 | SHEET 4 OF 5

5 4 3 2 1

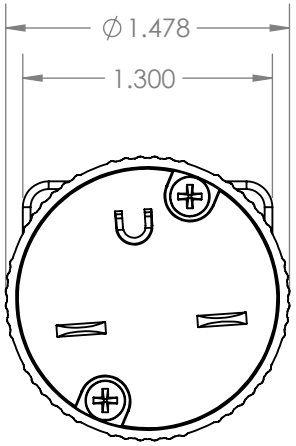


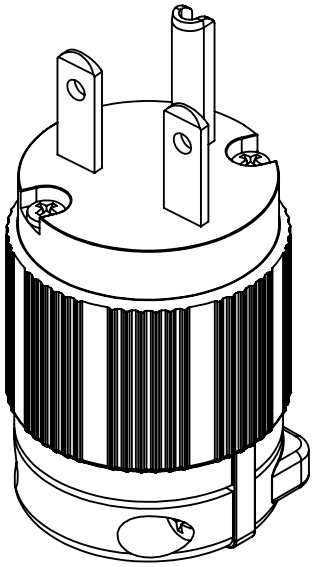

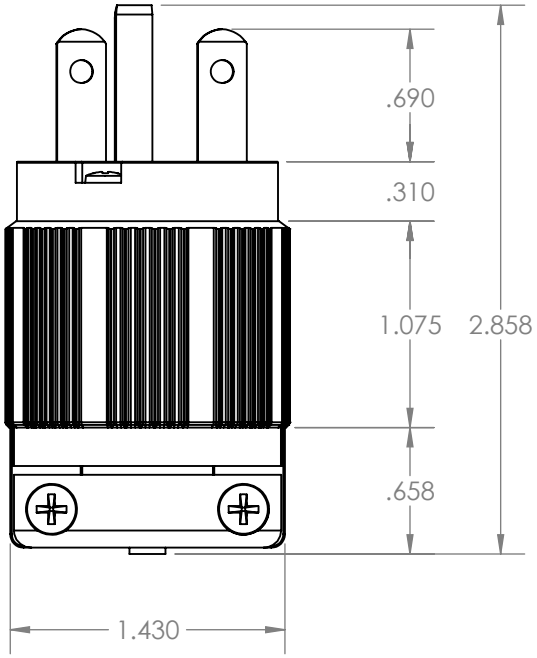


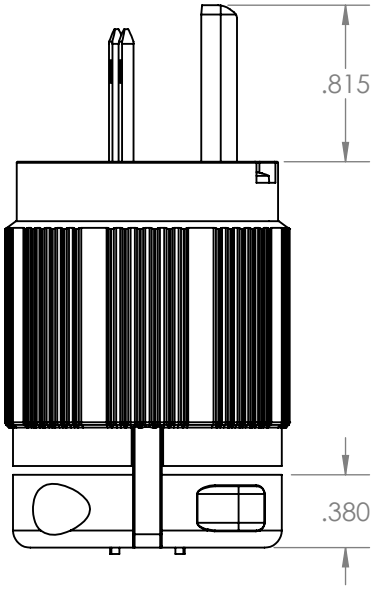


LARSON ELECTRONICS

TITLE:

**6-15P**

**PROPRIETARY AND CONFIDENTIAL**
THE INFORMATION CONTAINED IN THIS DRAWING IS THE SOLE PROPERTY OF LARSON ELECTRONICS LLC. ANY REPRODUCTION IN PART OR AS A WHOLE WITHOUT THE WRITTEN PERMISSION OF LARSON ELECTRONICS LLC IS PROHIBITED.

| | | NAME |
|---|---|---|
| DIMENSIONS ARE IN INCHES | DRAWN | CHRIS THAUER |
| MATERIAL | CHECKED | JEREMY BLANKENSHIP |
| DO NOT SCALE DRAWING | | |

| SIZE | DWG. NO. | REV |
|---|---|---|
| A | | |

SCALE: 1:1 | SHEET 1 OF 6

5 4 3 2 1

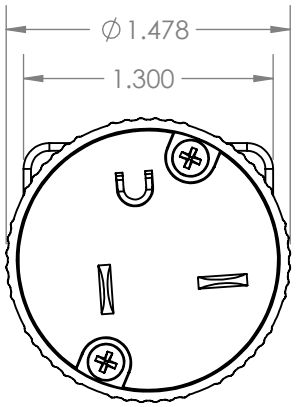


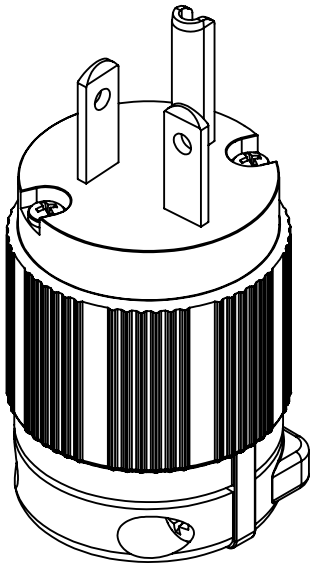

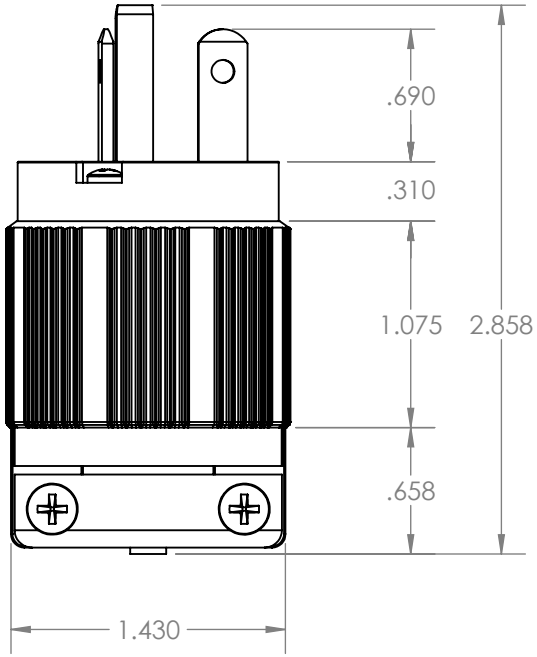


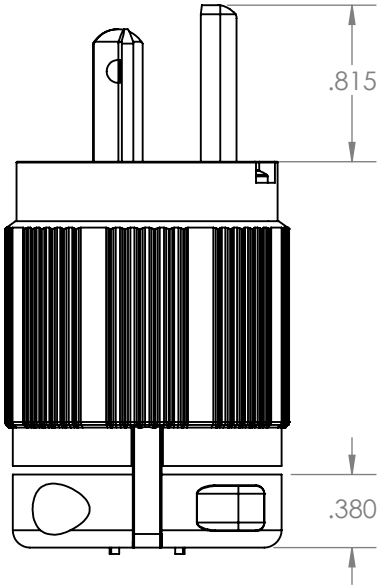


LARSON ELECTRONICS

TITLE:

**6-20P**

**PROPRIETARY AND CONFIDENTIAL**
THE INFORMATION CONTAINED IN THIS DRAWING IS THE SOLE PROPERTY OF LARSON ELECTRONICS LLC. ANY REPRODUCTION IN PART OR AS A WHOLE WITHOUT THE WRITTEN PERMISSION OF LARSON ELECTRONICS LLC IS PROHIBITED.

| | | NAME |
|---|---|---|
| DIMENSIONS ARE IN INCHES | DRAWN | CHRIS THAUER |
| MATERIAL | CHECKED | JEREMY BLANKENSHIP |
| DO NOT SCALE DRAWING | | |

| SIZE | DWG. NO. | REV |
|---|---|---|
| A | | |

SCALE: 1:1 SHEET 2 OF 6

5 4 3 2 1

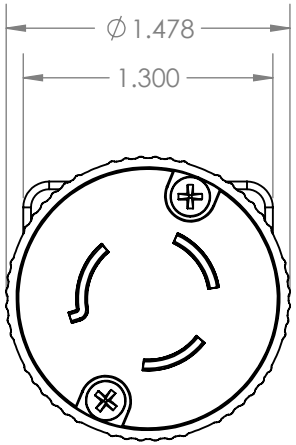


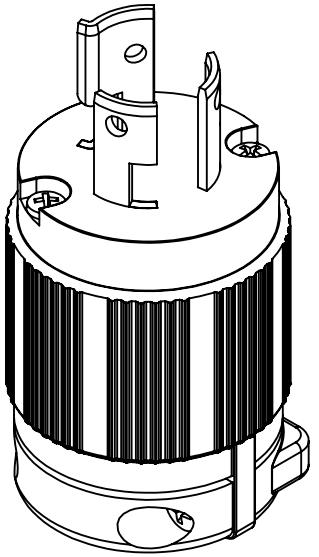

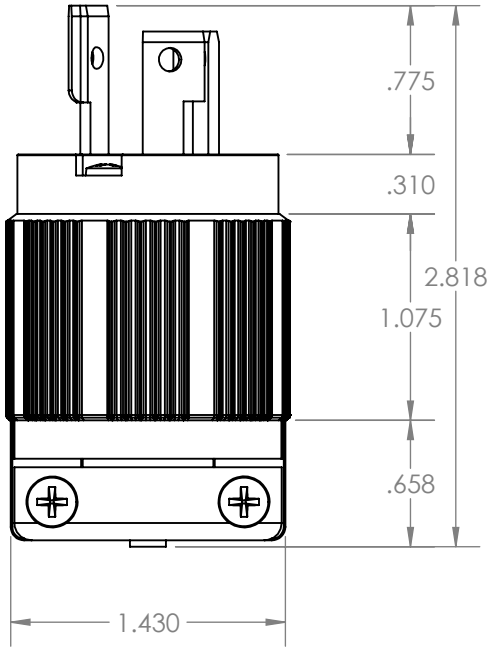


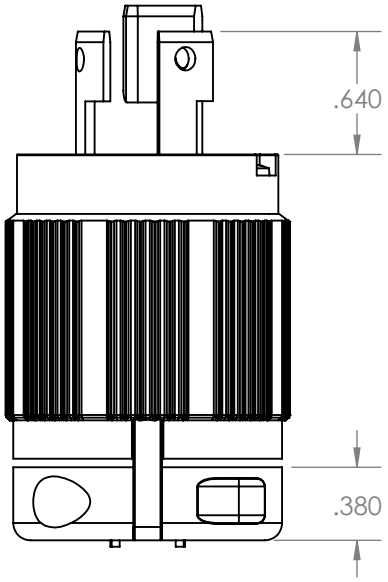


LARSON ELECTRONICS

TITLE:

# L6-15P

**PROPRIETARY AND CONFIDENTIAL**
THE INFORMATION CONTAINED IN THIS DRAWING IS THE SOLE PROPERTY OF LARSON ELECTRONICS LLC. ANY REPRODUCTION IN PART OR AS A WHOLE WITHOUT THE WRITTEN PERMISSION OF LARSON ELECTRONICS LLC IS PROHIBITED.

| | | NAME |
|---|---|---|
| DIMENSIONS ARE IN INCHES | DRAWN | CHRIS THAUER |
| MATERIAL | CHECKED | JEREMY BLANKENSHIP |
| DO NOT SCALE DRAWING | | |

| SIZE | DWG. NO. | REV |
|---|---|---|
| A | | |

SCALE: 1:1 SHEET 3 OF 6

5 4 3 2 1

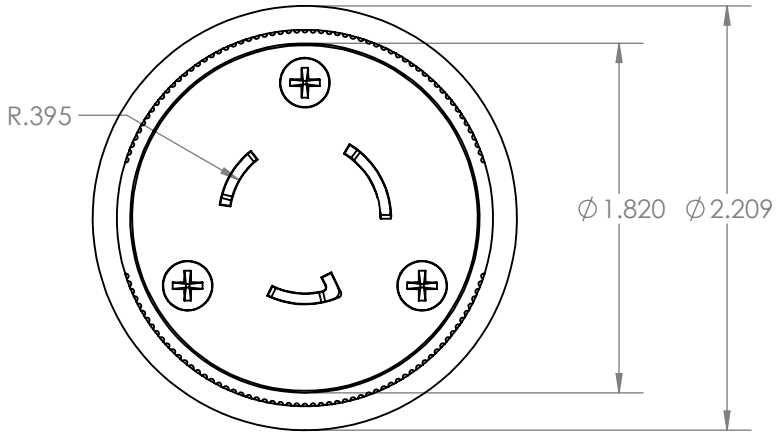


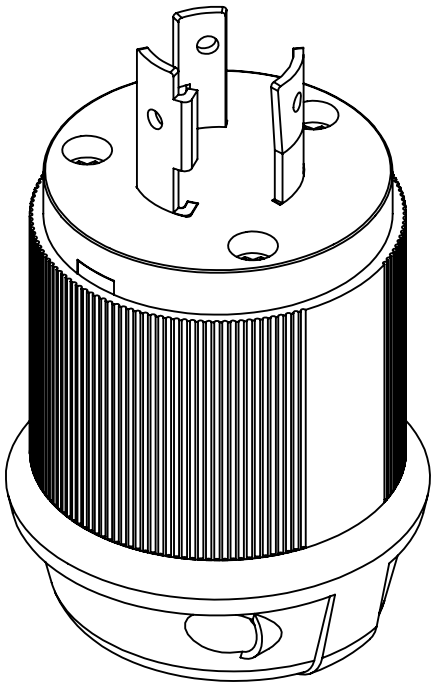

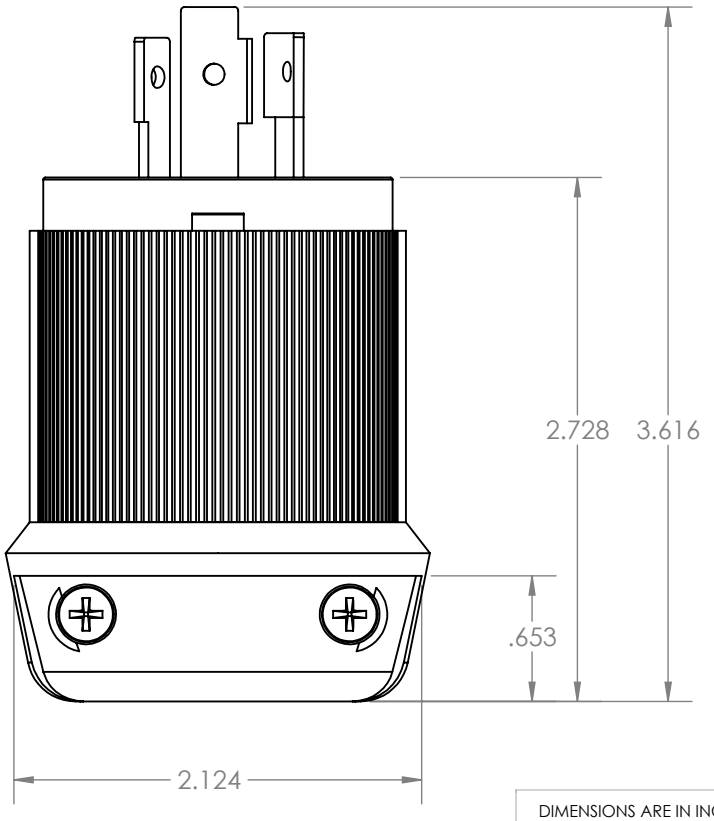


LARSON ELECTRONICS

TITLE:

**L6-20P**

**PROPRIETARY AND CONFIDENTIAL**
THE INFORMATION CONTAINED IN THIS DRAWING IS THE SOLE PROPERTY OF LARSON ELECTRONICS LLC. ANY REPRODUCTION IN PART OR AS A WHOLE WITHOUT THE WRITTEN PERMISSION OF LARSON ELECTRONICS LLC IS PROHIBITED.

| | | NAME |
|---|---|---|
| DIMENSIONS ARE IN INCHES | DRAWN | CHRIS THAUER |
| MATERIAL | CHECKED | JEREMY BLANKENSHIP |
| DO NOT SCALE DRAWING | | |

| SIZE | DWG. NO. | REV |
|---|---|---|
| A | | |

SCALE: 1:1 SHEET 4 OF 6

5 4 3 2 1

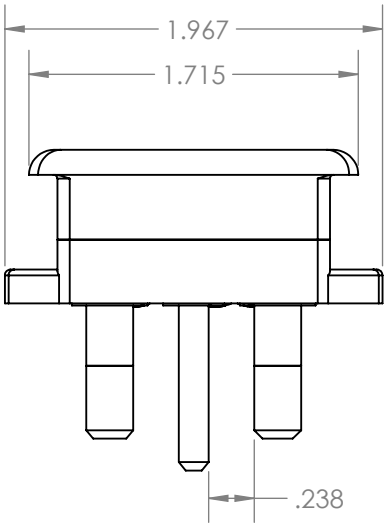


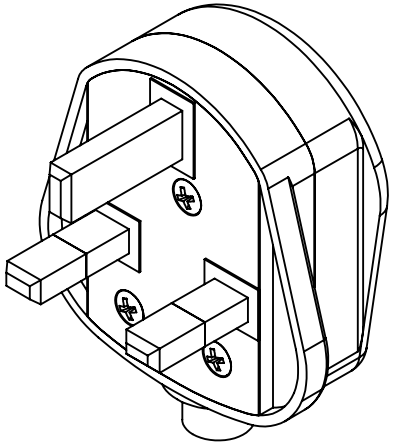

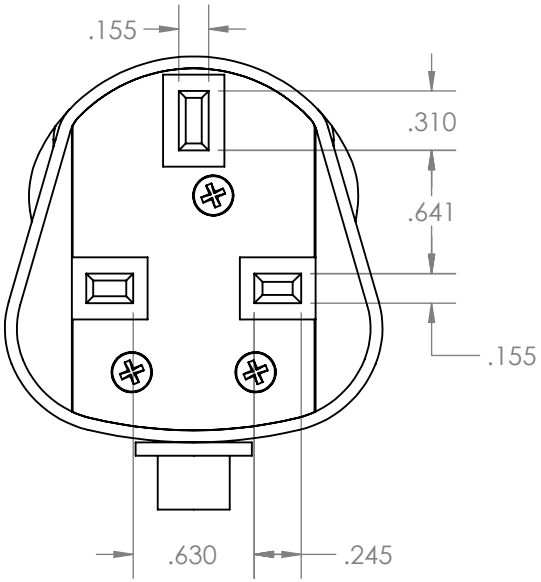


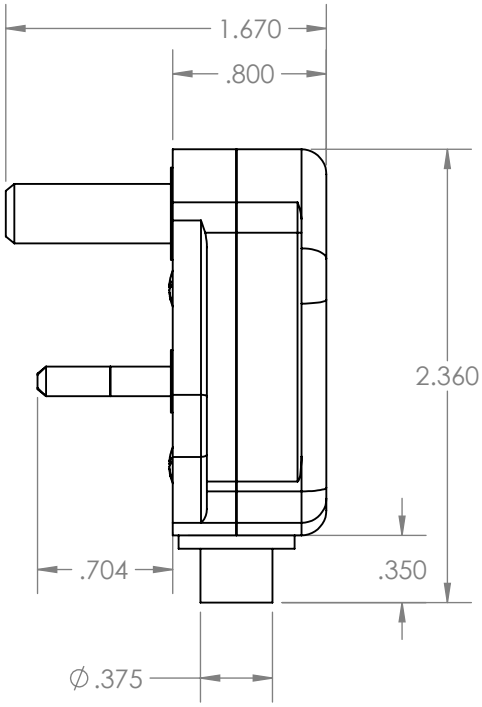


LARSON ELECTRONICS

TITLE:

**BS1363**

**PROPRIETARY AND CONFIDENTIAL**
THE INFORMATION CONTAINED IN THIS DRAWING IS THE SOLE PROPERTY OF LARSON ELECTRONICS LLC. ANY REPRODUCTION IN PART OR AS A WHOLE WITHOUT THE WRITTEN PERMISSION OF LARSON ELECTRONICS LLC IS PROHIBITED.

| | | NAME |
|---|---|---|
| DIMENSIONS ARE IN INCHES | DRAWN | CHRIS THAUER |
| MATERIAL | CHECKED | JEREMY BLANKENSHIP |
| DO NOT SCALE DRAWING | | |

| SIZE | DWG. NO. | REV |
|---|---|---|
| A | | |

SCALE: 1:1 SHEET 5 OF 6

5 4 3 2 1

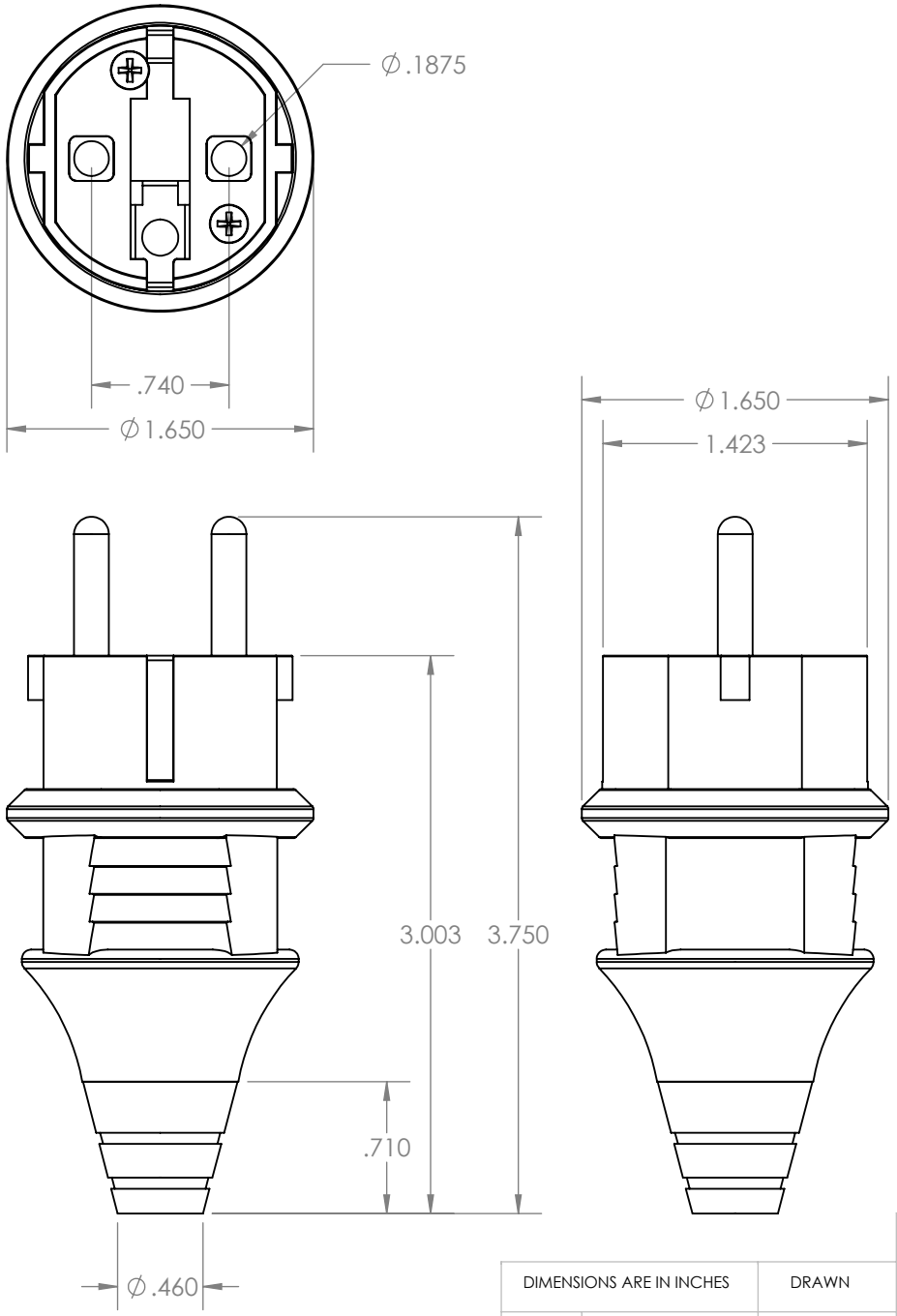


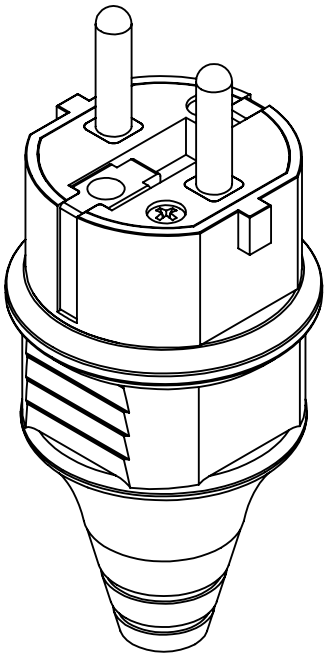

LARSON ELECTRONICS

TITLE:

# SCHUKO

**PROPRIETARY AND CONFIDENTIAL**
THE INFORMATION CONTAINED IN THIS DRAWING IS THE SOLE PROPERTY OF LARSON ELECTRONICS LLC. ANY REPRODUCTION IN PART OR AS A WHOLE WITHOUT THE WRITTEN PERMISSION OF LARSON ELECTRONICS LLC IS PROHIBITED.

| | | NAME |
|---|---|---|
| DIMENSIONS ARE IN INCHES | DRAWN | CHRIS THAUER |
| MATERIAL | CHECKED | JEREMY BLANKENSHIP |
| DO NOT SCALE DRAWING | | |

| SIZE | DWG. NO. | REV |
|---|---|---|
| A | | |

SCALE: 1:1 SHEET 6 OF 6

5 4 3 2 1