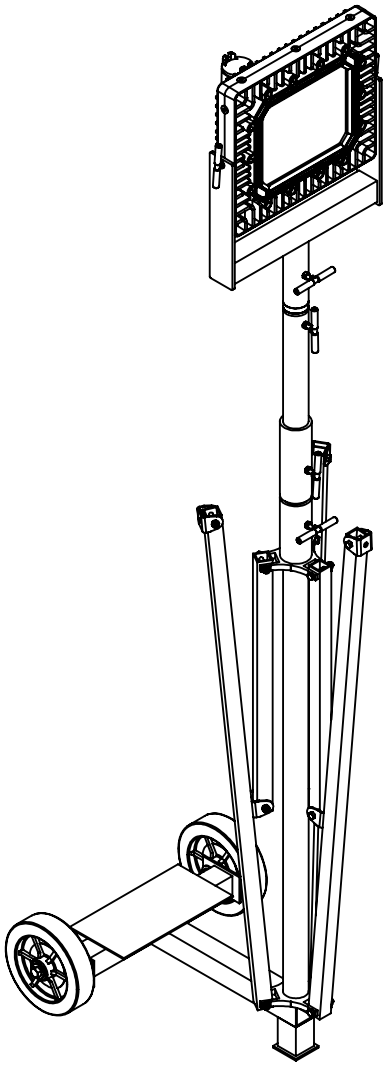

LARSON ELECTRONICS

TITLE:

EPL-TP-1X150LED-100

FINISH			
SURFACE AREA [sq. in]			NAME
DIMENSIONS ARE IN INCHES		DRAWN	CHRISTOPHER THAUER
MATERIAL		CHECKED	N/A
DO NOT SCALE DRAWING		DATE	12/24/2020

SIZE **A** | DWG. NO. | REV

SCALE: NTS | SHEET 1 OF 5

PROPRIETARY AND CONFIDENTIAL
THE INFORMATION CONTAINED IN THIS DRAWING IS THE SOLE PROPERTY OF LARSON ELECTRONICS LLC. ANY REPRODUCTION IN PART OR AS A WHOLE WITHOUT THE WRITTEN PERMISSION OF LARSON ELECTRONICS LLC IS PROHIBITED.

UNLESS OTHERWISE NOTED:

Angle	+/- .5 deg
.X	+/- .02
.XX	+/- .01
.XXX	+/- .005

ITEM NO.	PART NAME	DWG. NO.	QTY.
1	Wheel Base Welding		1
2	Wheel		2
3	1/2-13 x 3-1/2 Hex Bolt		2
4	1/2-13 Hex Nut		2
5	1/2 Flat Washer		4

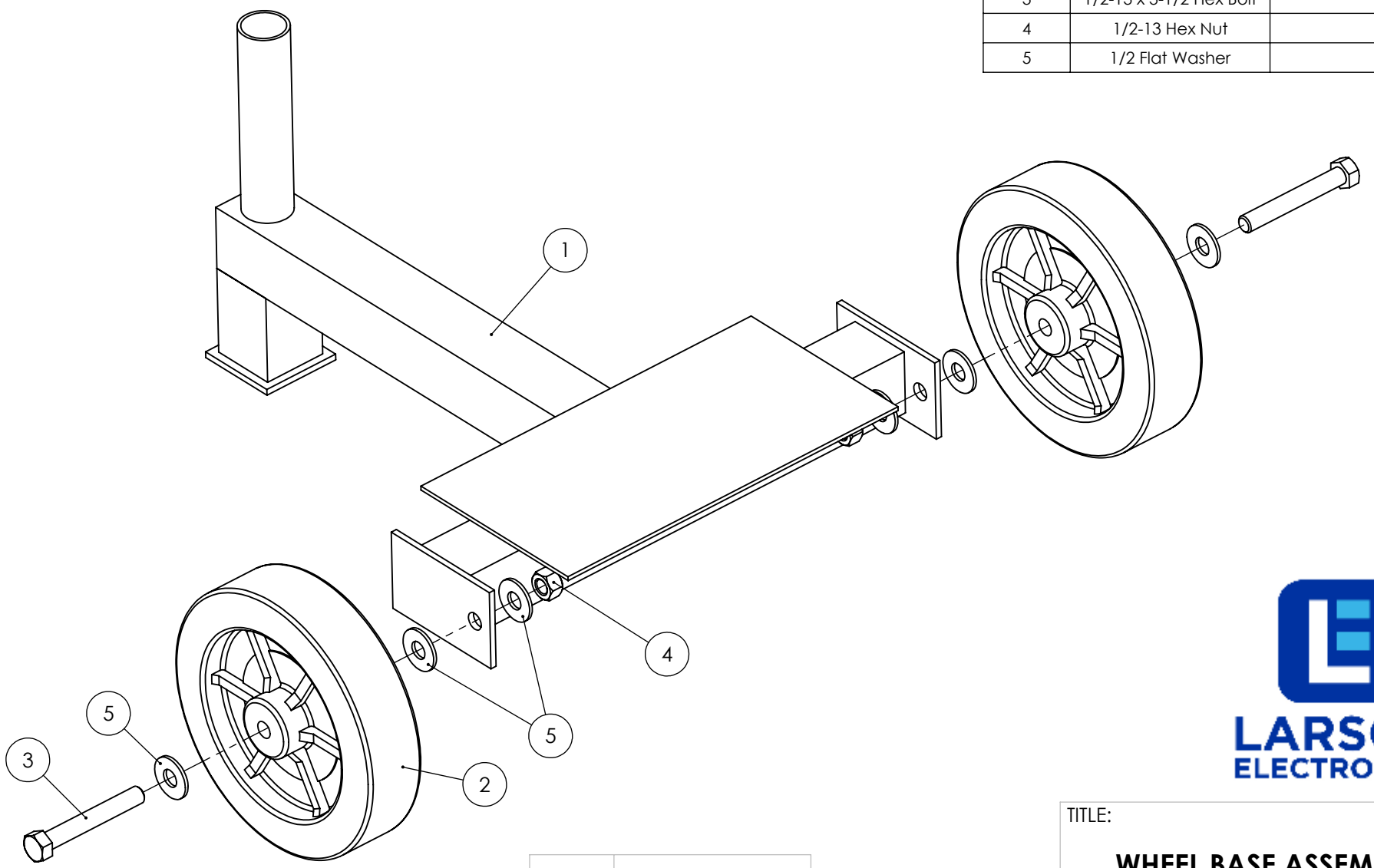

LARSON ELECTRONICS

PROPRIETARY AND CONFIDENTIAL
THE INFORMATION CONTAINED IN THIS DRAWING IS THE SOLE PROPERTY OF LARSON ELECTRONICS LLC. ANY REPRODUCTION IN PART OR AS A WHOLE WITHOUT THE WRITTEN PERMISSION OF LARSON ELECTRONICS LLC IS PROHIBITED.

UNLESS OTHERWISE NOTED:
Angle +/- .5 deg
.X +/- .02
.XX +/- .01
.XXX +/- .005

FINISH			
SURFACE AREA [sq. in]			NAME
DIMENSIONS ARE IN INCHES		DRAWN	CHRISTOPHER THAUER
MATERIAL		CHECKED	N/A
DO NOT SCALE DRAWING		DATE	12/24/2020

TITLE:

WHEEL BASE ASSEMBLY

SIZE	DWG. NO.	REV
A		

SCALE: NTS | SHEET 2 OF 5

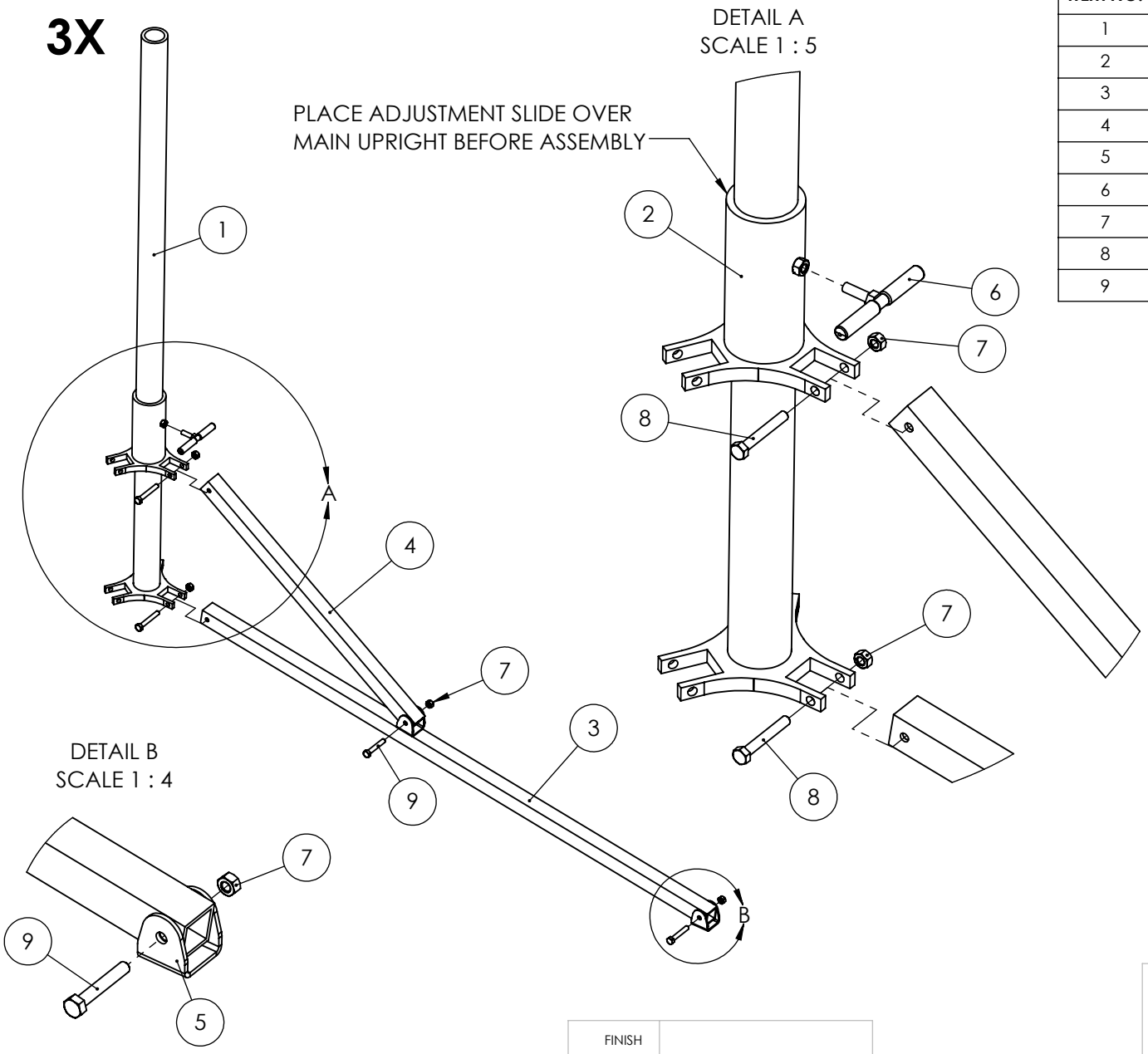

ITEM NO.	PART NAME	DWG. NO.	QTY.
1	Main Upright		1
2	Adjustment Slide		1
3	Leg Weld		3
4	2' Leg		3
5	Quadpod Hinge		3
6	T-Handle		1
7	5/16-18 Hex Nut		12
8	5/16-18 x 2-1/4 Hex Bolt		6
9	5/16-18 x 2 Hex Bolt		6

LARSON ELECTRONICS

PROPRIETARY AND CONFIDENTIAL
THE INFORMATION CONTAINED IN THIS DRAWING IS THE SOLE PROPERTY OF LARSON ELECTRONICS LLC. ANY REPRODUCTION IN PART OR AS A WHOLE WITHOUT THE WRITTEN PERMISSION OF LARSON ELECTRONICS LLC IS PROHIBITED.

UNLESS OTHERWISE NOTED:

Angle	+/- .5 deg
.X	+/- .02
.XX	+/- .01
.XXX	+/- .005

FINISH			
SURFACE AREA [sq. in]			NAME
DIMENSIONS ARE IN INCHES		DRAWN	CHRISTOPHER THAUER
MATERIAL		CHECKED	N/A
DO NOT SCALE DRAWING		DATE	12/24/2020

TITLE:

LEG ASSEMBLY

SIZE	DWG. NO.	REV
A		

SCALE: NTS

SHEET 3 OF 5

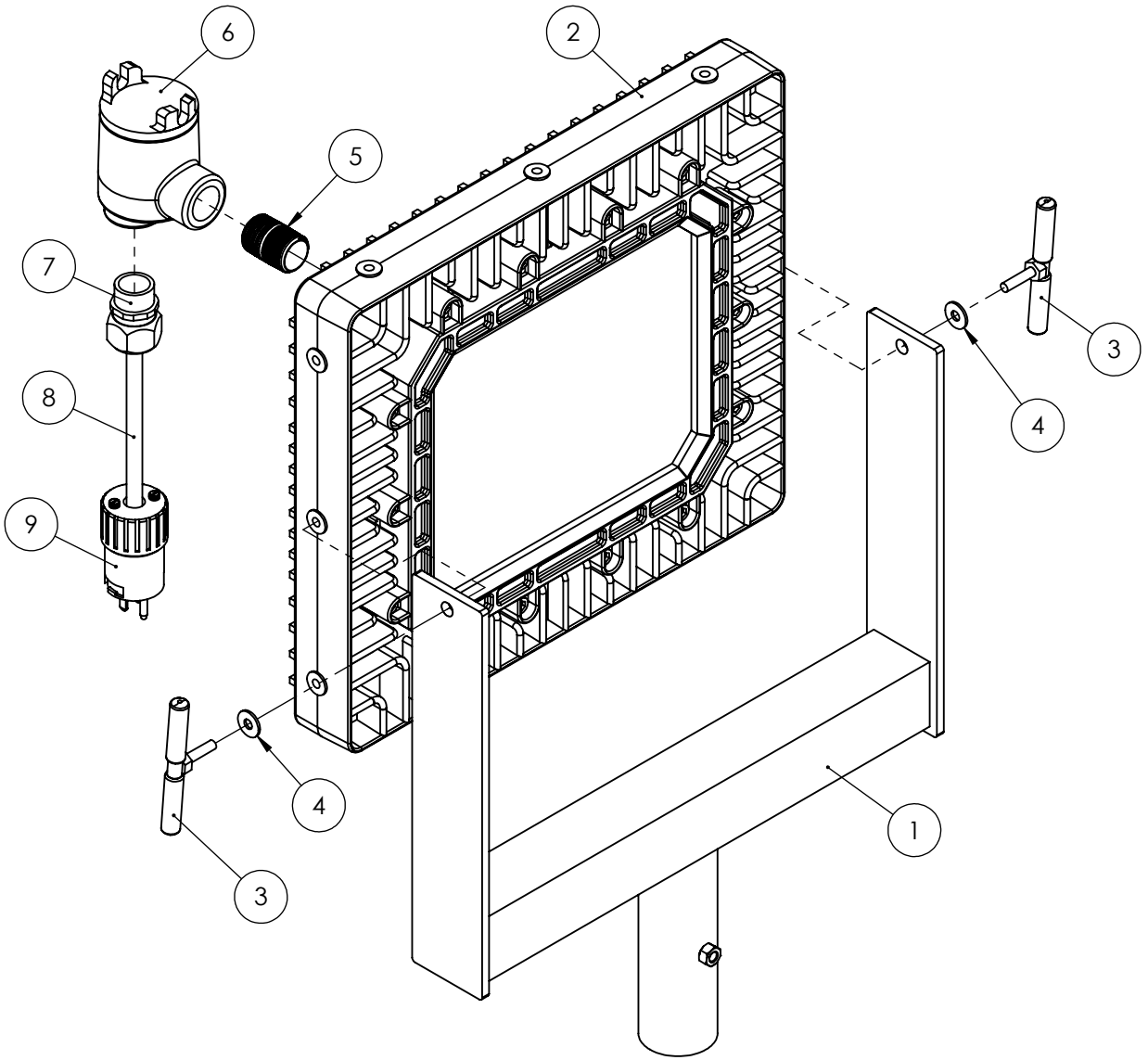

ITEM NO.	PART NAME	DWG. NO.	QTY.
1	Head Weld		1
2	EPL-HB-150LED-RT		1
3	T-Handle		2
4	1/4 Flat Washer		2
5	3/4 x 1-1/2 Nipple		1
6	EPJ-2-0.75IN		1
7	CGB-75-PNK		1
8	SOOW Cord		1
9	EPP-15A		1
10	XLE-04254-1X		3

LARSON ELECTRONICS

PROPRIETARY AND CONFIDENTIAL
THE INFORMATION CONTAINED IN THIS DRAWING IS THE SOLE PROPERTY OF LARSON ELECTRONICS LLC. ANY REPRODUCTION IN PART OR AS A WHOLE WITHOUT THE WRITTEN PERMISSION OF LARSON ELECTRONICS LLC IS PROHIBITED.

UNLESS OTHERWISE NOTED:
Angle +/- .5 deg
.X +/- .02
.XX +/- .01
.XXX +/- .005

FINISH			
SURFACE AREA [sq. in]			NAME
DIMENSIONS ARE IN INCHES		DRAWN	CHRISTOPHER THAUER
MATERIAL		CHECKED	N/A
DO NOT SCALE DRAWING		DATE	12/24/2020

TITLE:

HEAD ASSEMBLY

SIZE	DWG. NO.	REV
A		

SCALE: NTS

SHEET 4 OF 5

ITEM NO.	PART NAME	DWG. NO.	QTY.
1	Wheel Base Assembly		1
2	Leg Assembly		1
3	Extender		1
4	Upright Extension		1
5	Head Assembly		1
6	T-Handle		3

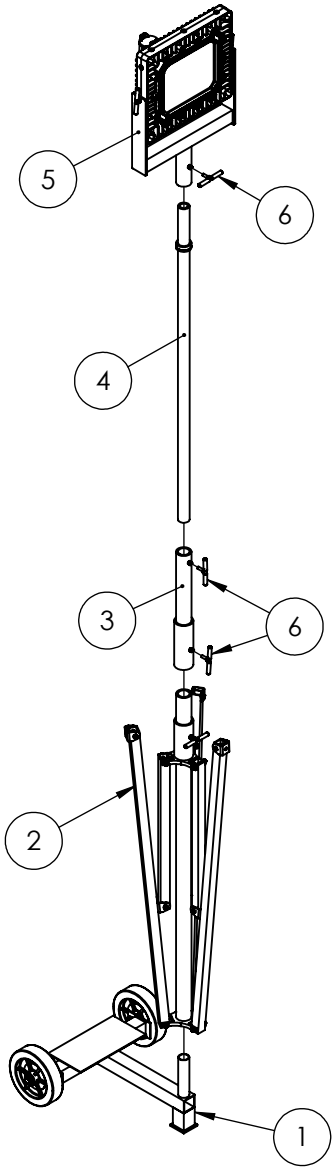

LARSON ELECTRONICS

TITLE:

FINAL ASSEMBLY

PROPRIETARY AND CONFIDENTIAL
THE INFORMATION CONTAINED IN THIS DRAWING IS THE SOLE PROPERTY OF LARSON ELECTRONICS LLC. ANY REPRODUCTION IN PART OR AS A WHOLE WITHOUT THE WRITTEN PERMISSION OF LARSON ELECTRONICS LLC IS PROHIBITED.

UNLESS OTHERWISE NOTED:

Angle	+/- .5 deg
.X	+/- .02
.XX	+/- .01
.XXX	+/- .005

FINISH			
SURFACE AREA [sq. in]			NAME
DIMENSIONS ARE IN INCHES		DRAWN	CHRISTOPHER THAUER
MATERIAL		CHECKED	N/A
DO NOT SCALE DRAWING		DATE	12/24/2020

SIZE	DWG. NO.	REV
A		

SCALE: NTS | SHEET 5 OF 5