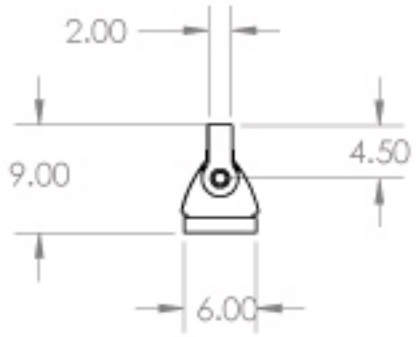

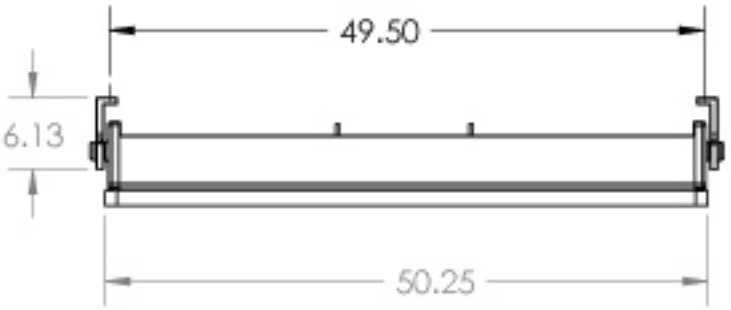



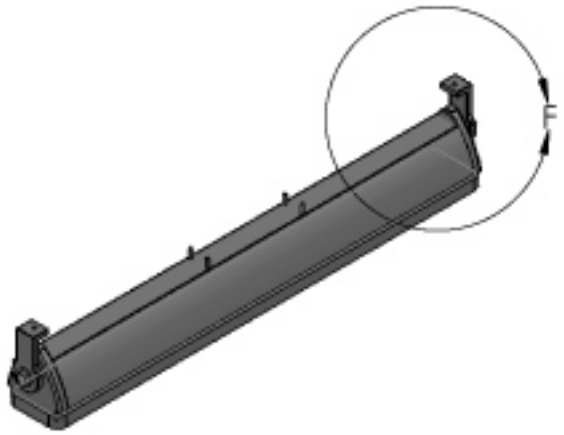

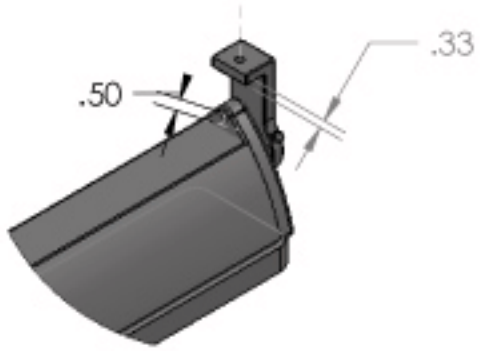

		UNLESS OTHERWISE SPECIFIED:		NAME	DATE
		DIMENSIONS ARE IN INCHES TOLERANCES: FRACTIONAL <MOD-PM> ANGULAR: MACH <MOD-PM> BEND <MOD-PM> TWO PLACE DECIMAL <MOD-PM> THREE PLACE DECIMAL <MOD-PM>	DRAWN		
			CHECKED		
			ENG APPR.		
			MFG APPR.		
		INTERPRET GEOMETRIC TOLERANCING PER:	Q.A.		
		MATERIAL	COMMENTS:		
NEXT ASSY	USED ON	FINISH			
APPLICATION		DO NOT SCALE DRAWING			

PROPRIETARY AND CONFIDENTIAL

THE INFORMATION CONTAINED IN THIS DRAWING IS THE SOLE PROPERTY OF <INSERT COMPANY NAME HERE>. ANY REPRODUCTION IN PART OR AS A WHOLE WITHOUT THE WRITTEN PERMISSION OF <INSERT COMPANY NAME HERE> IS PROHIBITED.

TITLE:

HAL-48-2L-LED-220V

SIZE	DWG. NO.	REV
A		
SCALE: 1:16	WEIGHT:	SHEET 1 OF 1

5 4 3 2 1