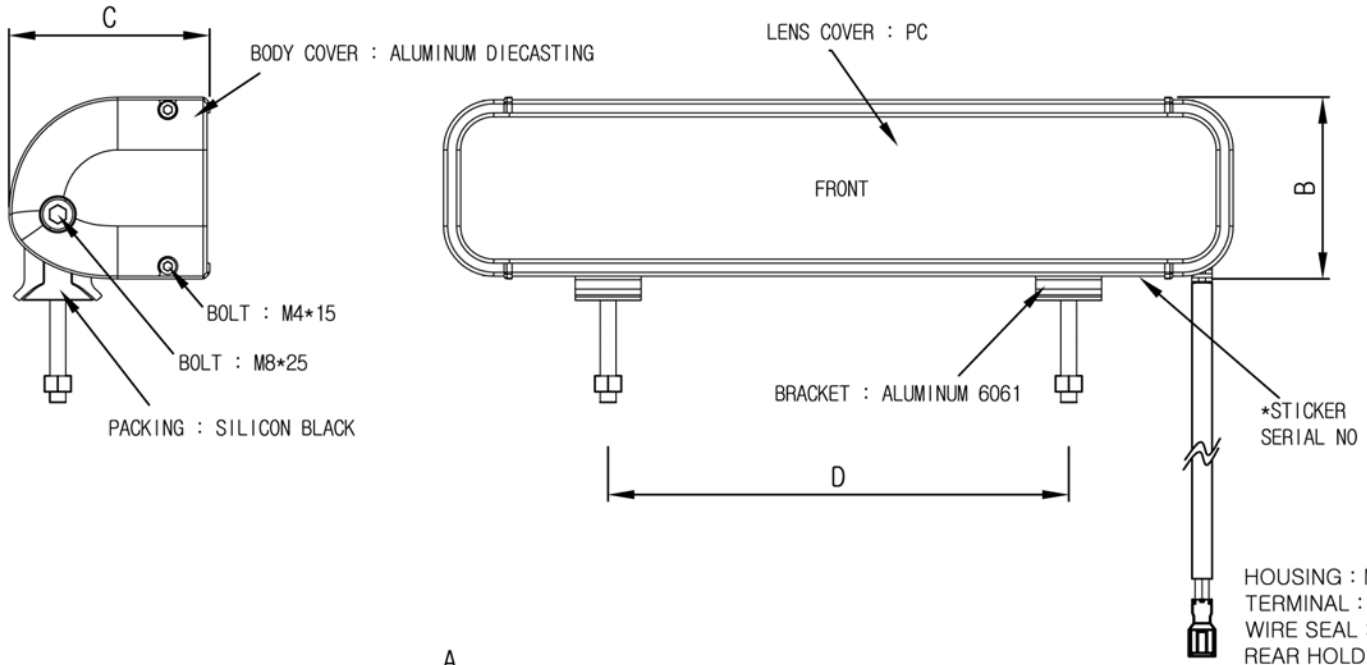

*SPECIFICATION

1.OPERATING VOLTAGE (12V) : DC11.0V ~ 16.0V
(24V) : DC18.0V ~ 32.0V
2.LED : 3W(750mA)
3.REFLECTOR : PC / VACUUM METALLIZED
4.LENS : ACRYLIC
5.VIBRATION : 8.6G$_{RMS}$
6.WEATHER PROOF &DUST RESISTANCE
7.TEMPERATURE : -40℃~105℃
8.LIFE : 500,000Hrs
9.IP RATING : IP65

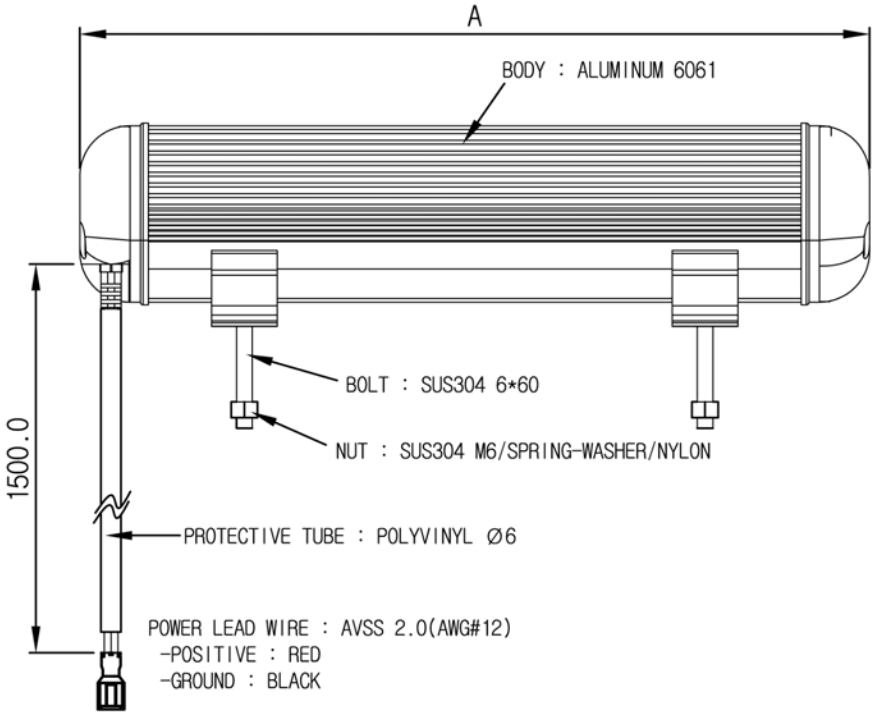

LED QUANTITY	WATT(W)	A (inch/mm)	B (inch/mm)	C (inch/mm)	D (inch/mm)	BRACKET (PCS)	WEGHT (Kg)
8 LED	24	5.8(147.6)	2.7 (69.0)	3.0(76.25)	1.57(40)	2	0.95
12 LED	36	7.8(198.4)			2.32(59)		1.20
20 LED	60	11.8(300.0)			4.92(125)		1.65
32 LED	96	17.6(446.4)			5.47(139)	3	2.50
40 LED	120	21.7(550.0)			5.0(127)	4	3.00
60 LED	180	31.8(808.0)			8.35(212)		4.35
80 LED	240	41.8(1062.0)			11.65(296)		5.65

UNIT	mm	DRAWING	CHECK	APPROVAL		
SCALE	2:1					
CREATED	2008.03.25					