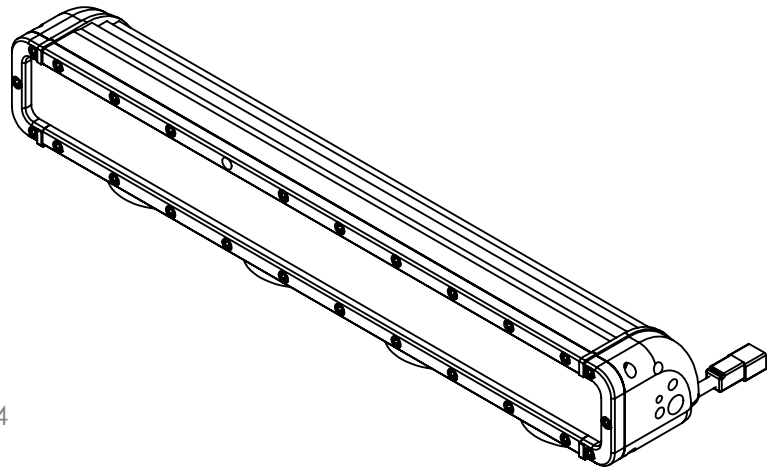

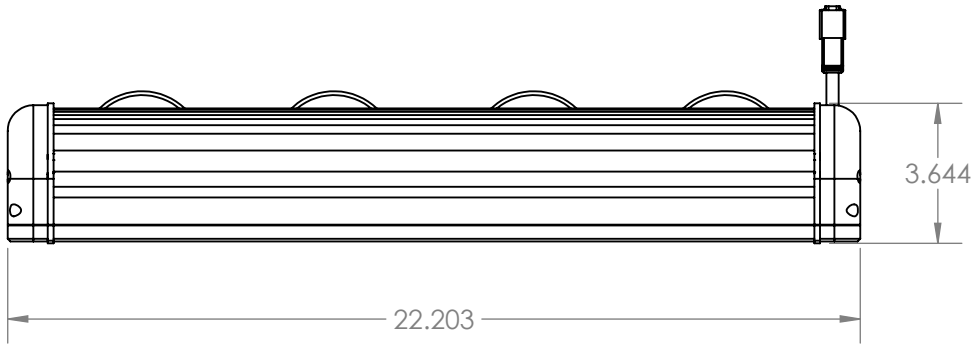


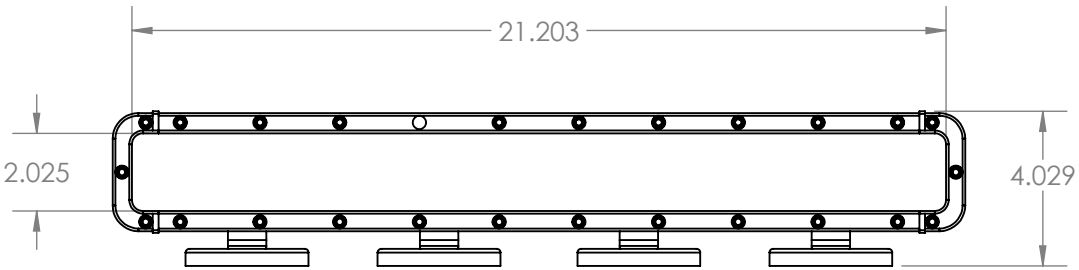


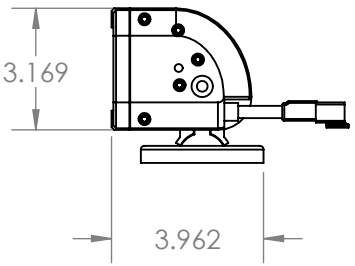


LARSON ELECTRONICS

TITLE:

**LEDLB-40-M**

| | | | |
|---|---|---|---|
| FINISH | | | |
| SURFACE AREA [sq. in] | | | NAME |
| DIMENSIONS ARE IN INCHES | | DRAWN | CHRISTOPHER THAUER |
| MATERIAL | | CHECKED | N/A |
| DO NOT SCALE DRAWING | | DATE | 1/14/2022 |

| SIZE | DWG. NO. | REV |
|---|---|---|
| A | | |

SCALE: NTS | SHEET 1 OF 1

**PROPRIETARY AND CONFIDENTIAL**
THE INFORMATION CONTAINED IN THIS DRAWING IS THE SOLE PROPERTY OF LARSON ELECTRONICS LLC. ANY REPRODUCTION IN PART OR AS A WHOLE WITHOUT THE WRITTEN PERMISSION OF LARSON ELECTRONICS LLC IS PROHIBITED.

UNLESS OTHERWISE NOTED:

| | |
|---|---|
| Angle | +/- .5 deg |
| .X | +/- .02 |
| .XX | +/- .01 |
| .XXX | +/- .005 |