REV	DESCRIPTION	DATE
A	PRODUCT DESCRIPTION	11.13.2026

MPD-DS-FM-NFDS-3P-4W-34.5KV-2000A-DF-BM-N3R-GO-VB

LARSON ELECTRONICS®

SKU: MPD-DS-FM-NFDS-3P-4W-34.5KV-2000A-DF-BM-N3R-GO-VB

Unit Details: MV Disconnect Switch, 2000 Amp, 34.5KV 3PH AC, 3-Pole 4-Wire, Floor Mount, NEMA 3R, Group-operated, Vertical Break Air Switch

FRONT VIEW

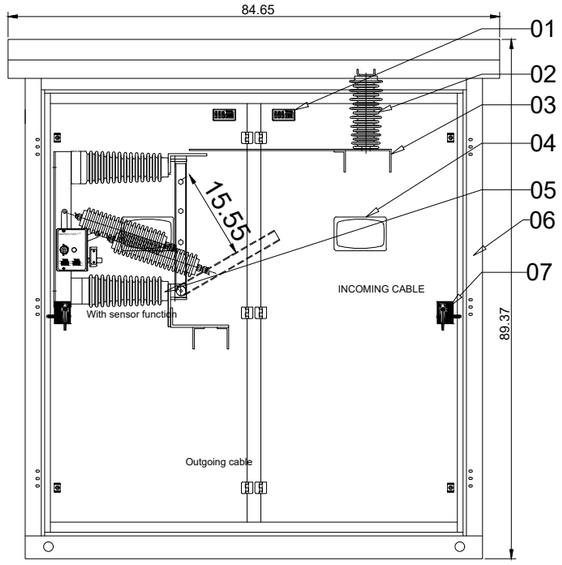

SIDE VIEW

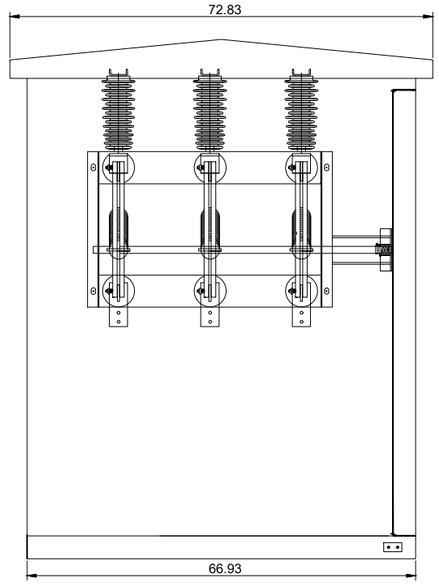

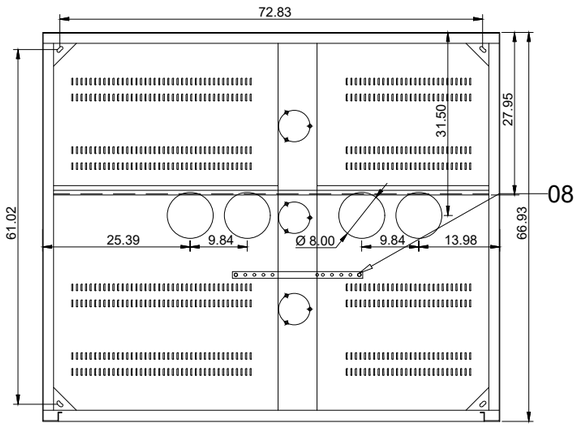

BOTTOM VIEW

Specification	Value
Equipment Type	Non-Fused Gang Operated Air Break Disconnect Switch, Service Entrance (single enclosure with line-in and line-out)
Rated Voltage	34.5 kV nominal (35 kV rated)
Continuous Current Rating	2000 A
Phase / Wire Configuration	3-Ph, 4-Wire (insulated groundable neutral kit with bonding strap)
Switch Operation	Gang Operated, Manual via Handle, padlockable in open and closed positions. Motor operation provisions: N/A.
Control Voltage	N/A
Mounting	Floor Mount
Break Type	Vertical-Break Air Disconnect, with open/close indicators
Enclosure	NEMA 3R, Ventilated, 11GA Sheet Steel, ANSI 49 Grey
Cable Entry	Bottom Feed in and out, terminal lugs accept 750MCM–1/0

MANUAL DISCONNECT SWITCH

Switch by Larson Electronics

LARSON ELECTRONICS
9419 E US HWY 175,
KEMP, TX 75143

TITLE		
MPD-DS-FM-NFDS-3P-4W-34.5KV -2000A-DF-BM-N3R-GO-VB		
DRAWN BY: JMD	DATE: 11.13.2026	REV: A
CHECKED BY: RR	SHEET #: 1 OF 1	DRAWING #: 101

SKU: MPD-DS-FM-NFDS-3P-4W-34.5KV-2000A-DF-BM-N3R-GO-VB

Unit Details: MV Disconnect Switch, 2000 Amp, 34.5KV 3PH AC, 3-Pole 4-Wire, Floor Mount, NEMA 3R, Group-operated, Vertical Break Air Switch

FRONT VIEW

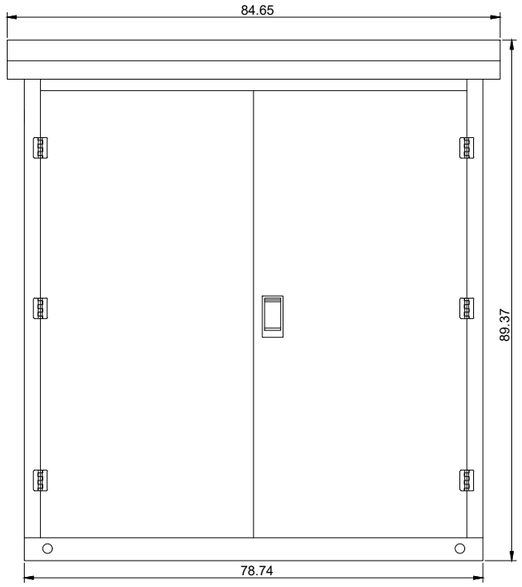

SIDE VIEW

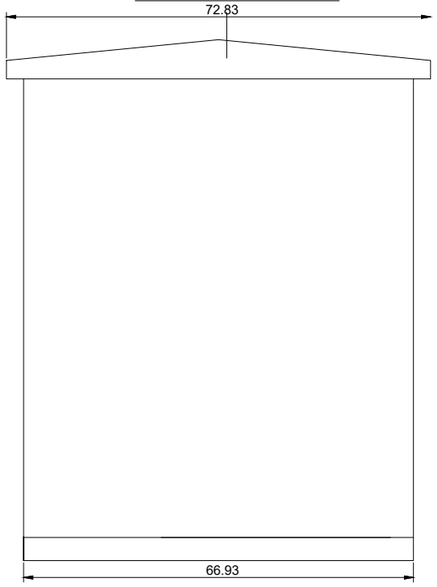

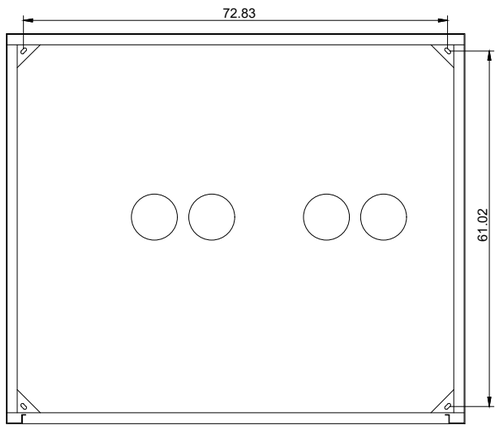

BOTTOM VIEW

MANUAL DISCONNECT SWITCH

Switch by Larson Electronics

LARSON ELECTRONICS	TITLE: MPD-DS-FM-NFDS-3P-4W-34.5KV -2000A-DF-BM-N3R-GO-VB		
	DRAWN BY: JMD	DATE: 11.13.2026	REV: A
9419 E US HWY 175, KEMP, TX 75143	CHECKED BY: RR	SHEET #: 1 OF 1	DRAWING #: 101