REV	DESCRIPTION	DATE
A	PRODUCT DESCRIPTION	09/1/2026

MPD-STS-3P-100A-480V-3PH-N1-M2

LARSON ELECTRONICS®

FRONT VIEW

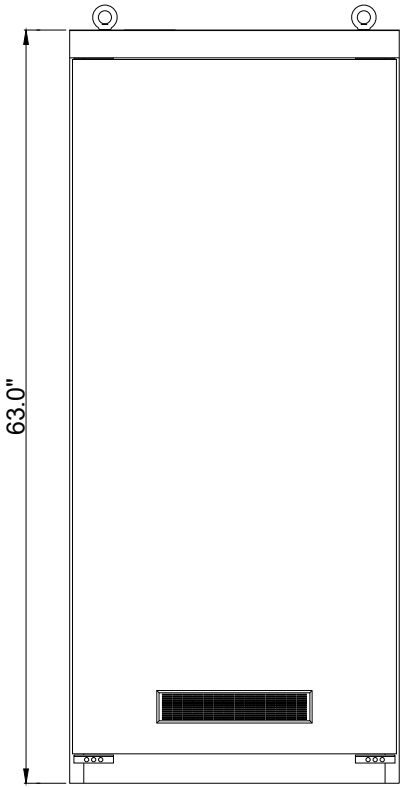

LEFT SIDE VIEW

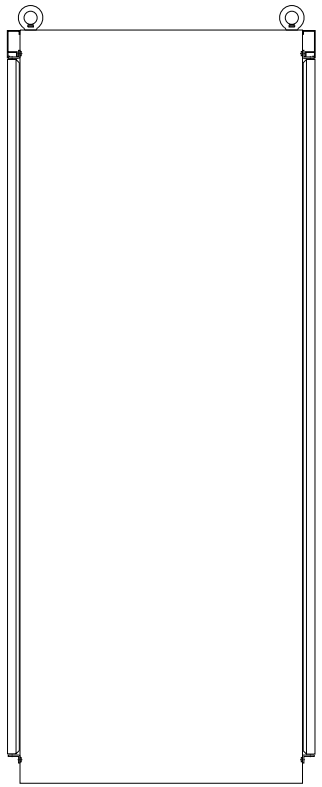

REAR VIEW

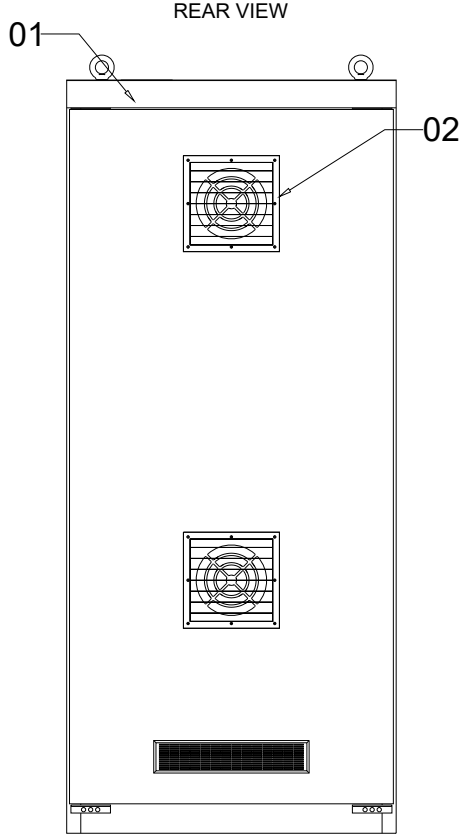

Specification	Value
Enclosure Color	ANSI 49 Gray
Enclosure Material	See instructions
Operating Altitude	≤1000 m (≤3,281 ft)
Operating Environment	Indoor, floor-mounted
Protection Rating	NEMA 1
Cable Entry/Exit	Bottom Entry & Bottom Exit (Cable)
Busbar Configuration	3-Phase 4-Wire, Copper Busbar
Connection Cable	1/0 AWG to 14 AWG
Rated Voltage	480V/277V
Rated Current	100 A
Frequency	50/60 Hz
Dimensions Unit	Inches (in)

BOTTOM VIEW

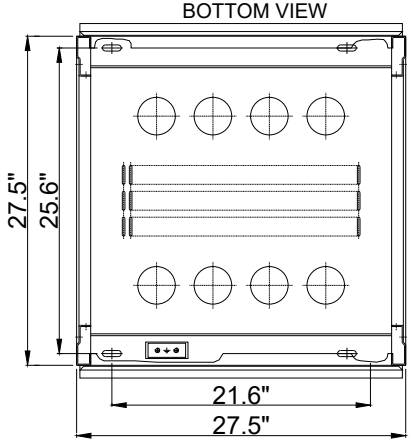

LARSON ELECTRONICS

9419 E US HWY 175,
KEMP, TX 75143

TITLE: OUTLINE DRAWINGS

DRAWN BY	DATE	REV
AA	09-1-2026	A
CHECKED BY	SHEET #	DRAWING #
	01 OF 02	101

FRONT VIEW

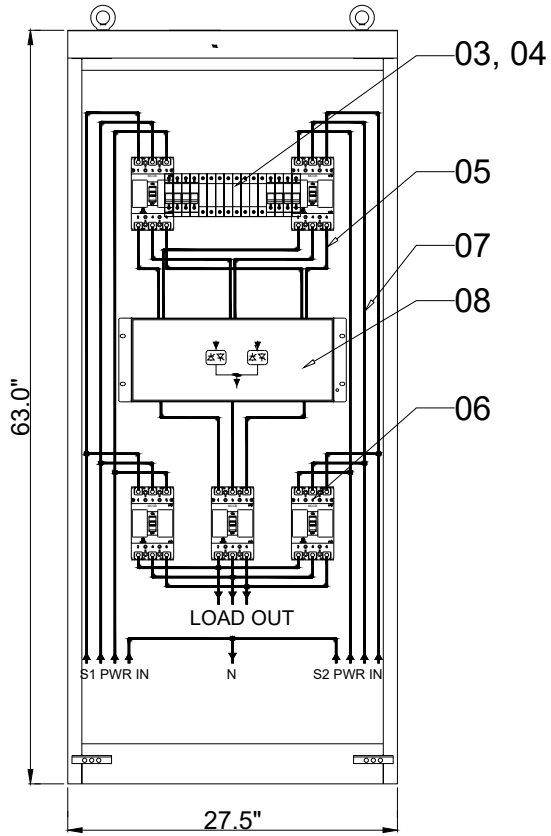

LEFT SIDE

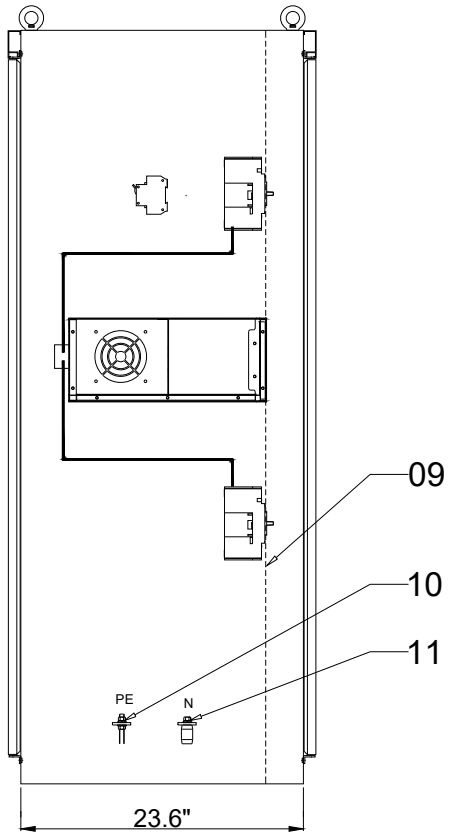

SINGLE LINE DIAGRAM

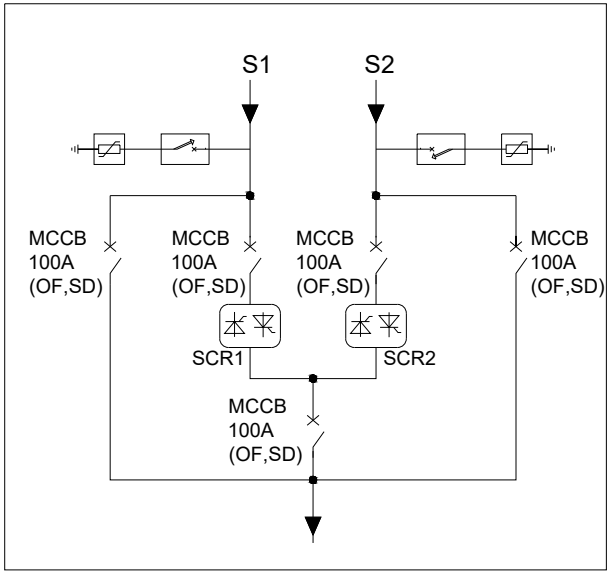

S.No	Name	Specification	Qty	Remarks
1	Modular Enclosure	Approx. 700 × 1600 × 700 mm (27.56 × 62.99 × 27.56 in)	1	
2	Axial Fan	Industrial ventilation fan	2	
3	Surge Protective Device	Type II, 40 kA, 4P	2	
4	Protection Fuse	40 A, 3P fuse	1	
5	Copper Busbar	ABC TMY, approx. 15 × 3 mm (0.59 × 0.12 in)		
6	MCCB	100A MCCB, 3-Pole, with Auxiliary Contact (OF) and Alarm Contact (SD)	5	
7	Copper Busbar	ABC TMY, approx. 30 × 10 mm (1.18 × 0.39 in)		
8	Static Transfer Switch	100 A, 3P	1	
9	Safety Barrier	Safety isolation barrier	1	
10	Copper Ground Busbar	Copper grounding busbar	1	
11	Neutral Copper Busbar	N TMY, approx. 15 × 3 mm (0.59 × 0.12 in)	1	

LARSON ELECTRONICS

9419 E US HWY 175,
KEMP, TX 75143

TITLE			
SLD AND BOM			
DRAWN BY	DATE	REV	
AA	09-1-2026	A	
CHECKED BY	SHEET #	DRAWING #	
	02 OF 02	101	