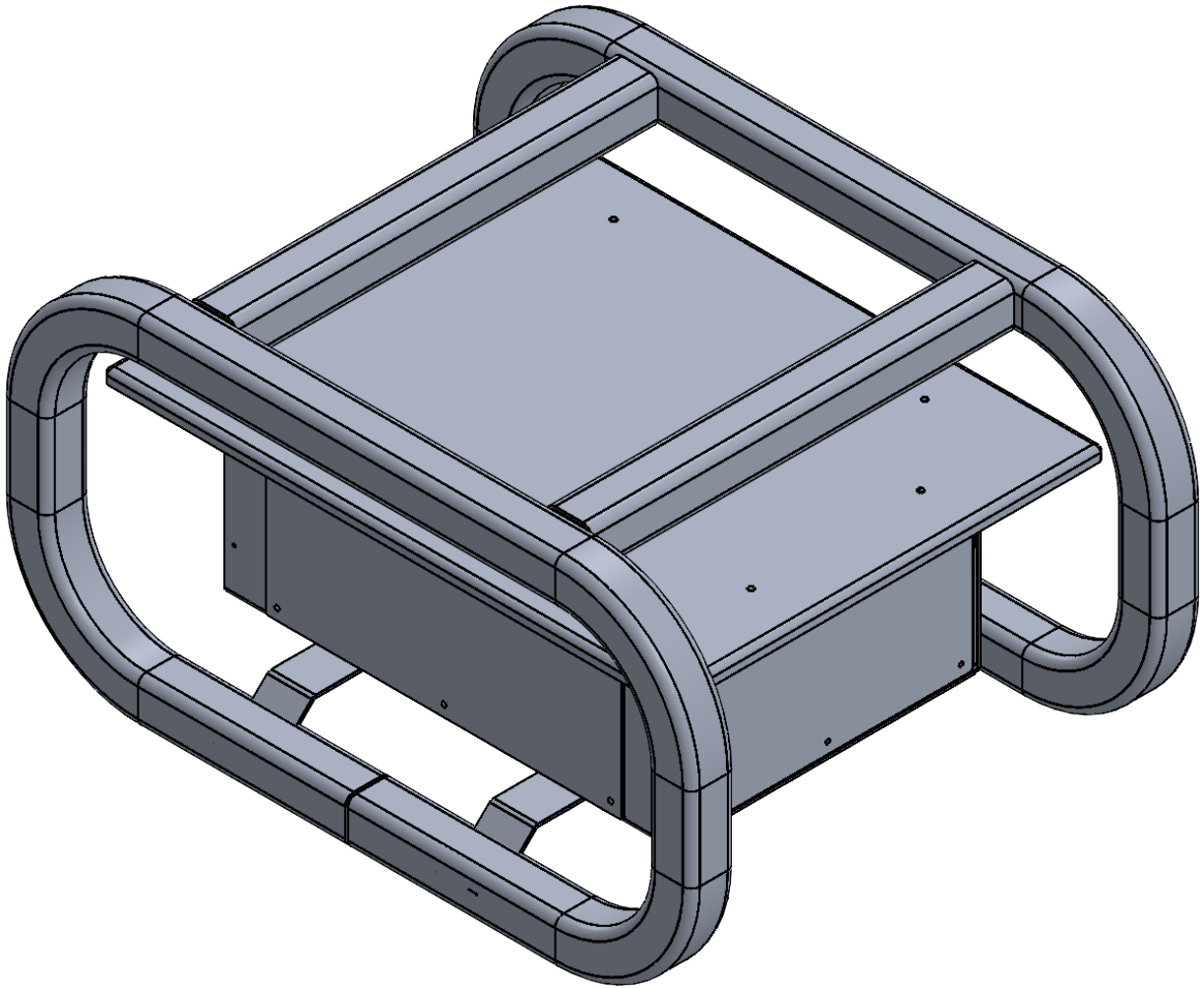

LARSON ELECTRONICS

PART NUMBER:
MPD-PSBEC-PWCDT

SIZE	REV
A	2

DIMENSIONS ARE IN INCHES				
DO NOT SCALE DRAWING	DATE	8/19/2024	SCALE: NTS	SHEET 1 OF 25

PROPRIETARY AND CONFIDENTIAL
THE INFORMATION CONTAINED IN THIS DRAWING IS THE SOLE PROPERTY OF LARSON ELECTRONICS LLC. ANY REPRODUCTION IN PART OR AS A WHOLE WITHOUT THE WRITTEN PERMISSION OF LARSON ELECTRONICS LLC IS PROHIBITED.

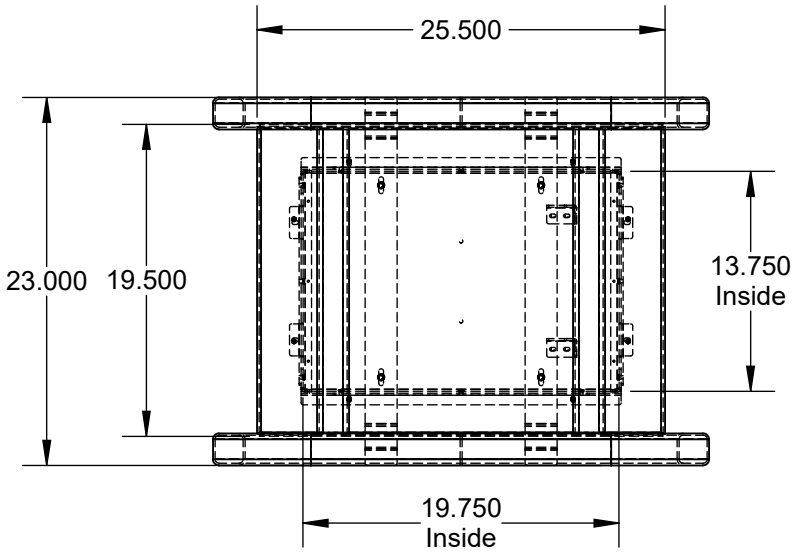

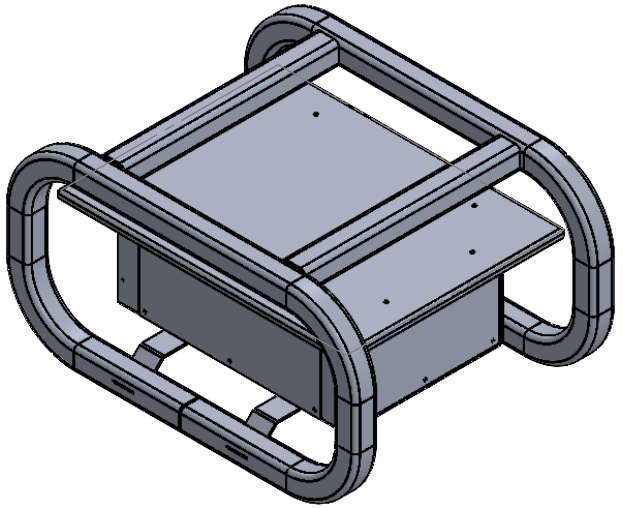

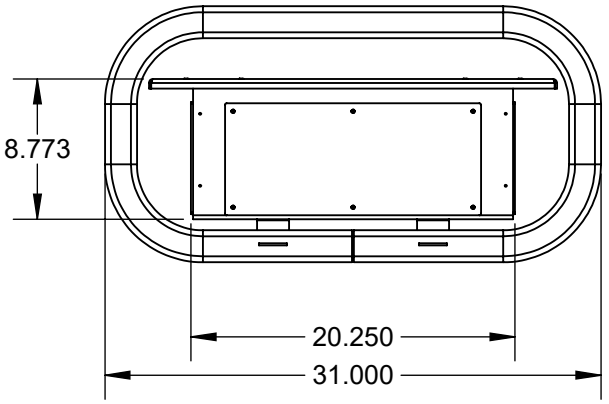

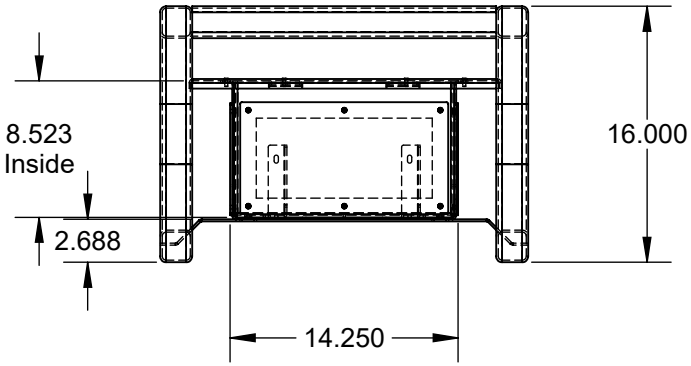

LARSON ELECTRONICS

PART NUMBER:
MPD-PSBEC-PWCDT

SIZE	REV
A	2

PROPRIETARY AND CONFIDENTIAL
THE INFORMATION CONTAINED IN THIS DRAWING IS THE SOLE PROPERTY OF LARSON ELECTRONICS LLC. ANY REPRODUCTION IN PART OR AS A WHOLE WITHOUT THE WRITTEN PERMISSION OF LARSON ELECTRONICS LLC IS PROHIBITED.

DIMENSIONS ARE IN INCHES				
DO NOT SCALE DRAWING	DATE	8/19/2024	SCALE: NTS	SHEET 3 OF 25