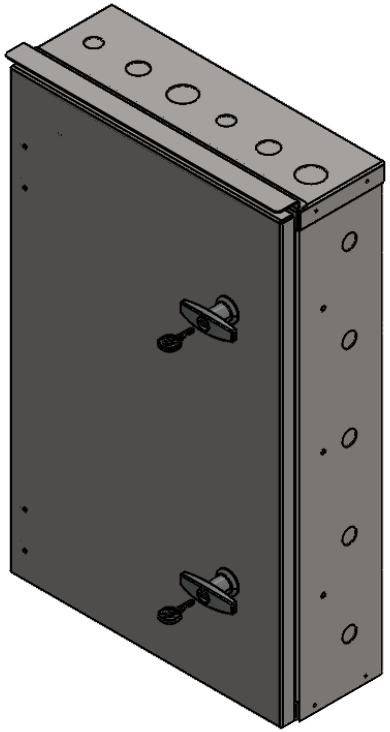

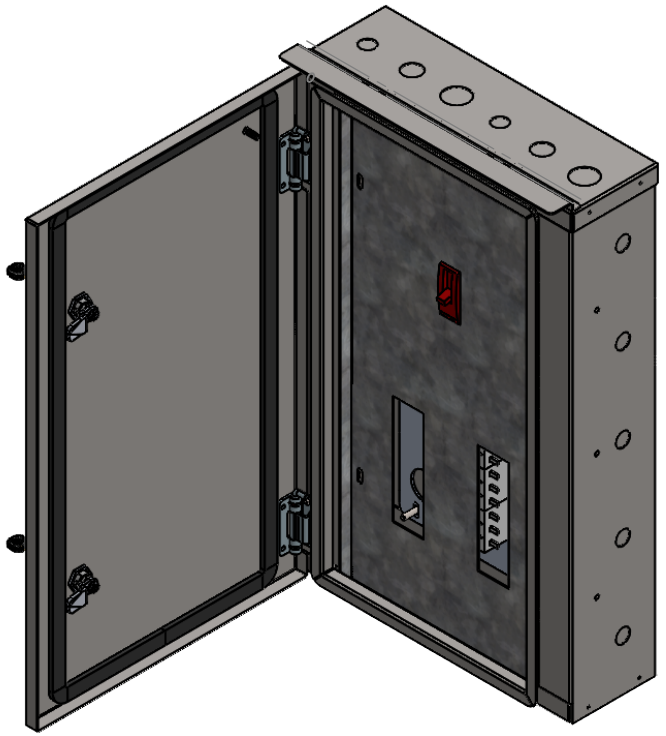

LARSON ELECTRONICS

PART NUMBER:

MPD-PB-LB-MB-SZ-J-L-18-TF-N4X-18.S10

SIZE	REV
A	

SCALE: NTS | SHEET 1 OF 4

DATE 2/13/2026

DIMENSIONS ARE IN INCHES

DO NOT SCALE DRAWING

UNLESS OTHERWISE NOTED:

Angle	+/- .5 deg
.X	+/- .02
.XX	+/- .01
.XXX	+/- .005

PROPRIETARY AND CONFIDENTIAL

THE INFORMATION CONTAINED IN THIS DRAWING IS THE SOLE PROPERTY OF LARSON ELECTRONICS LLC. ANY REPRODUCTION IN PART OR AS A WHOLE WITHOUT THE WRITTEN PERMISSION OF LARSON ELECTRONICS LLC IS PROHIBITED.

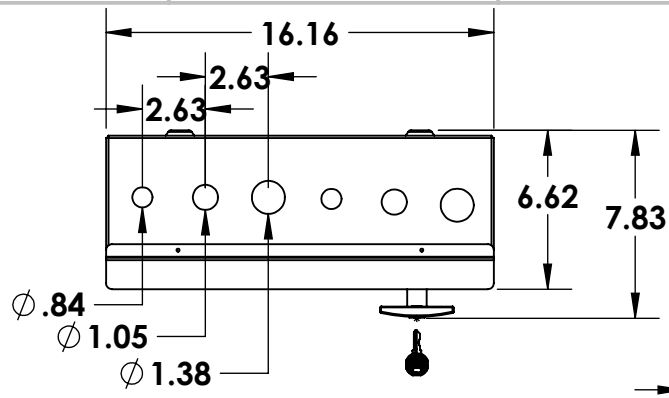

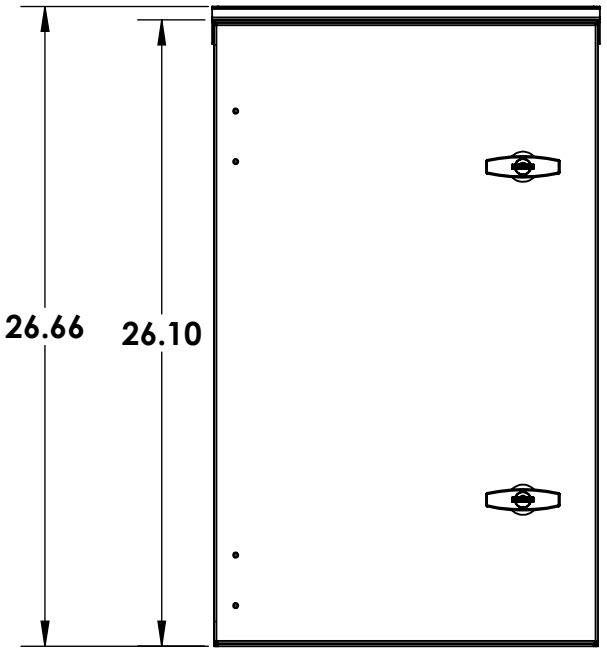

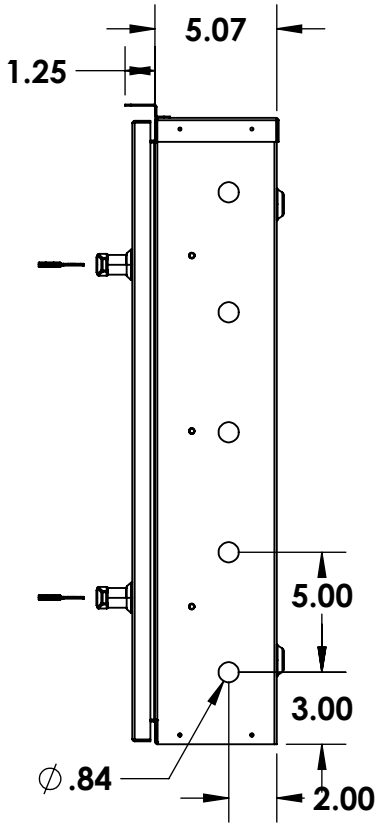

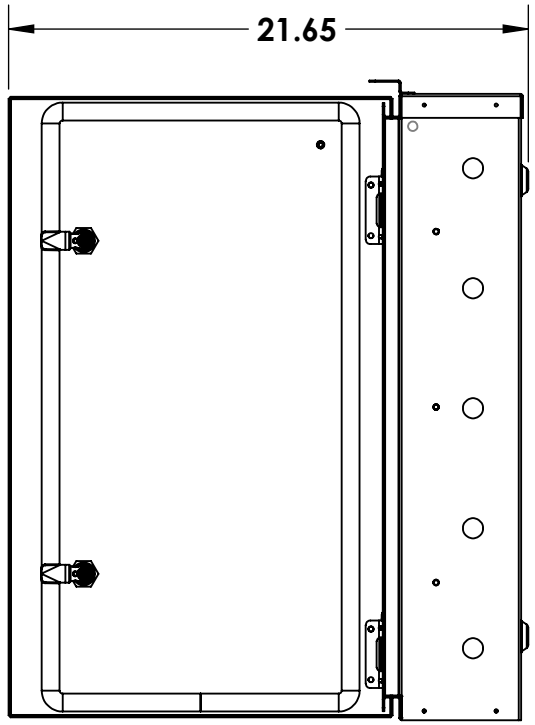

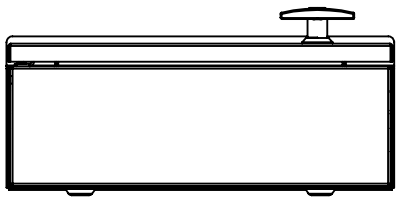

LARSON ELECTRONICS

PROPRIETARY AND CONFIDENTIAL

THE INFORMATION CONTAINED IN THIS DRAWING IS THE SOLE PROPERTY OF LARSON ELECTRONICS LLC. ANY REPRODUCTION IN PART OR AS A WHOLE WITHOUT THE WRITTEN PERMISSION OF LARSON ELECTRONICS LLC IS PROHIBITED.

PART NUMBER:

MPD-PB-LB-MB-SZ-J-L-18-TF-N4X-18.S10

DIMENSIONS ARE IN INCHES		SIZE **A**		REV
DO NOT SCALE DRAWING	DATE 2/13/2026	SCALE: NTS		SHEET 2 OF 4