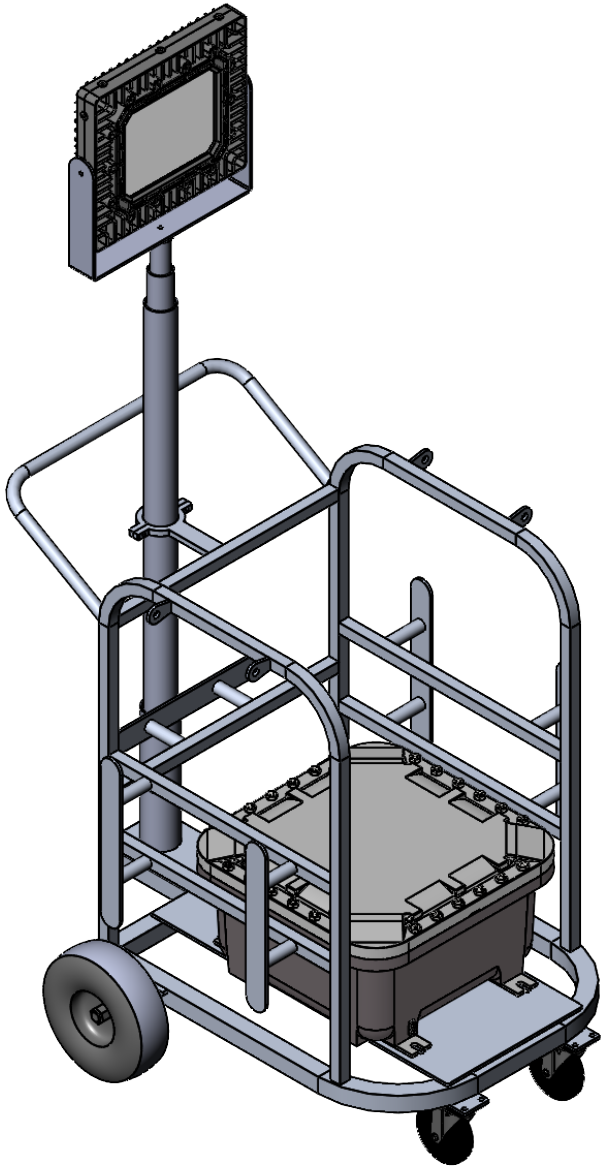

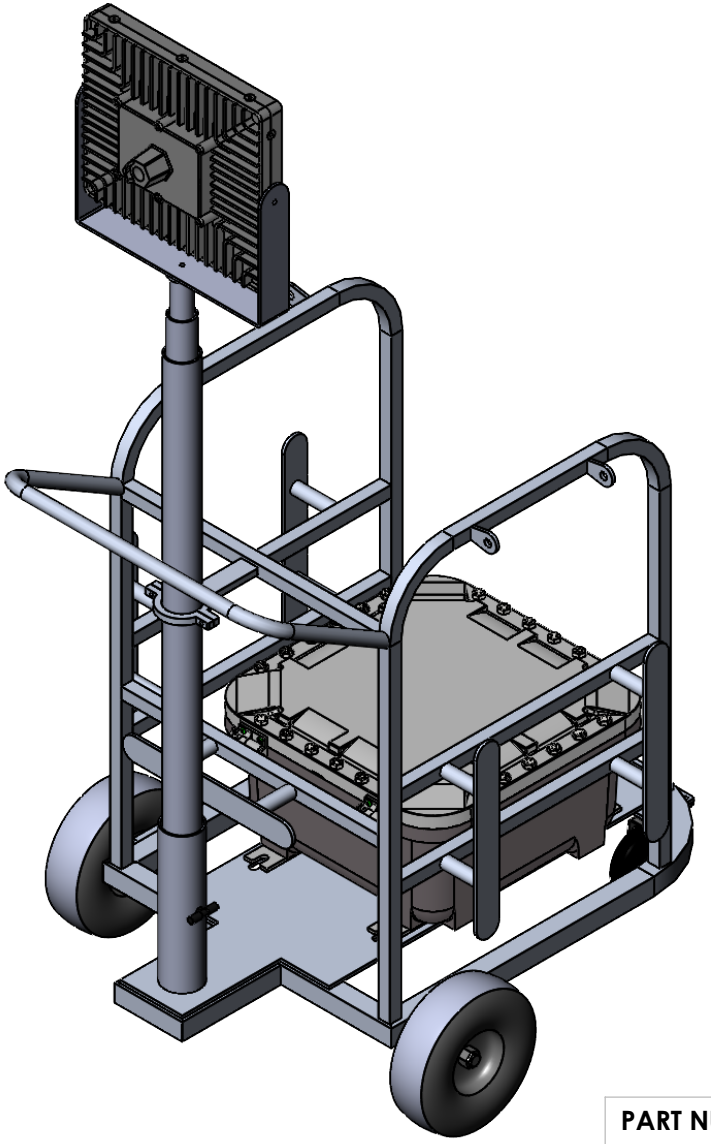

LARSON ELECTRONICS

PART NUMBER:

EPL-RPS-140A-APM-150LED-RT--DIMM-M3-100C

PROPRIETARY AND CONFIDENTIAL
THE INFORMATION CONTAINED IN THIS DRAWING IS THE SOLE PROPERTY OF LARSON ELECTRONICS LLC. ANY REPRODUCTION IN PART OR AS A WHOLE WITHOUT THE WRITTEN PERMISSION OF LARSON ELECTRONICS LLC IS PROHIBITED.

DIMENSIONS ARE IN INCHES			SIZE A	REV 1
DO NOT SCALE DRAWING	DATE	9/1/2021	SCALE: NTS	SHEET 1 OF 3

5 4 3 2 1

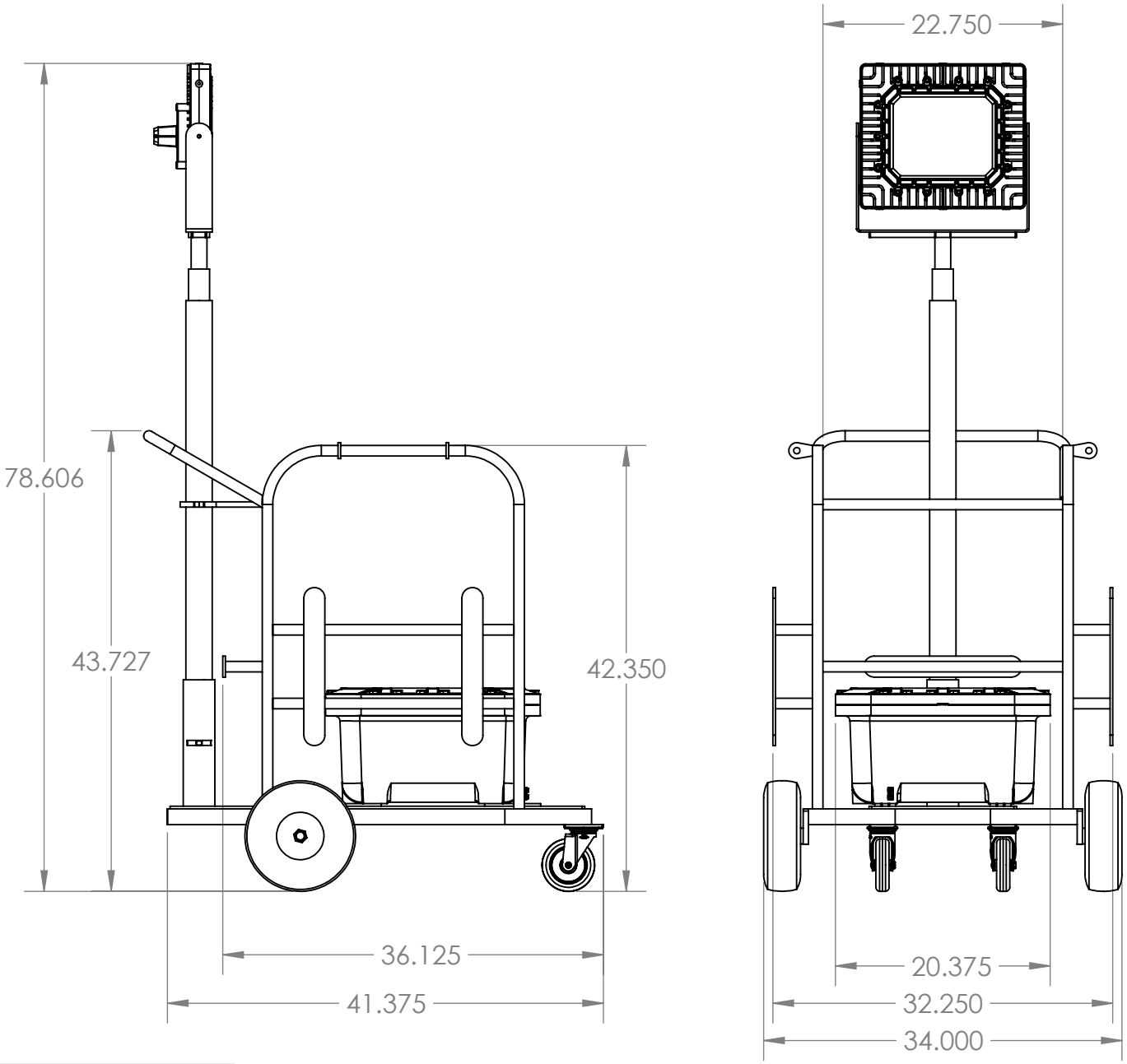

LARSON ELECTRONICS

PART NUMBER:

EPL-RPS-140A-APM-150LED-RT--DIMM-M3-100C

SIZE		REV
A		1

PROPRIETARY AND CONFIDENTIAL
THE INFORMATION CONTAINED IN THIS DRAWING IS THE SOLE PROPERTY OF LARSON ELECTRONICS LLC. ANY REPRODUCTION IN PART OR AS A WHOLE WITHOUT THE WRITTEN PERMISSION OF LARSON ELECTRONICS LLC IS PROHIBITED.

DIMENSIONS ARE IN INCHES				
DO NOT SCALE DRAWING	DATE	9/1/2021	SCALE: NTS	SHEET 2 OF 3

5 4 3 2 1

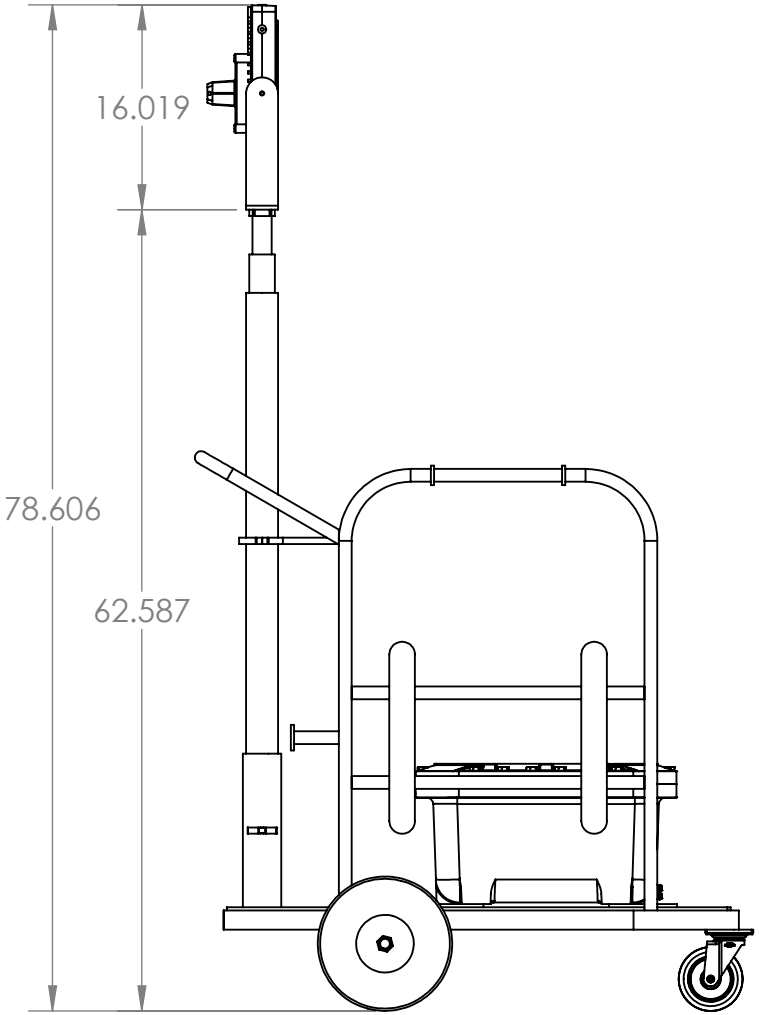

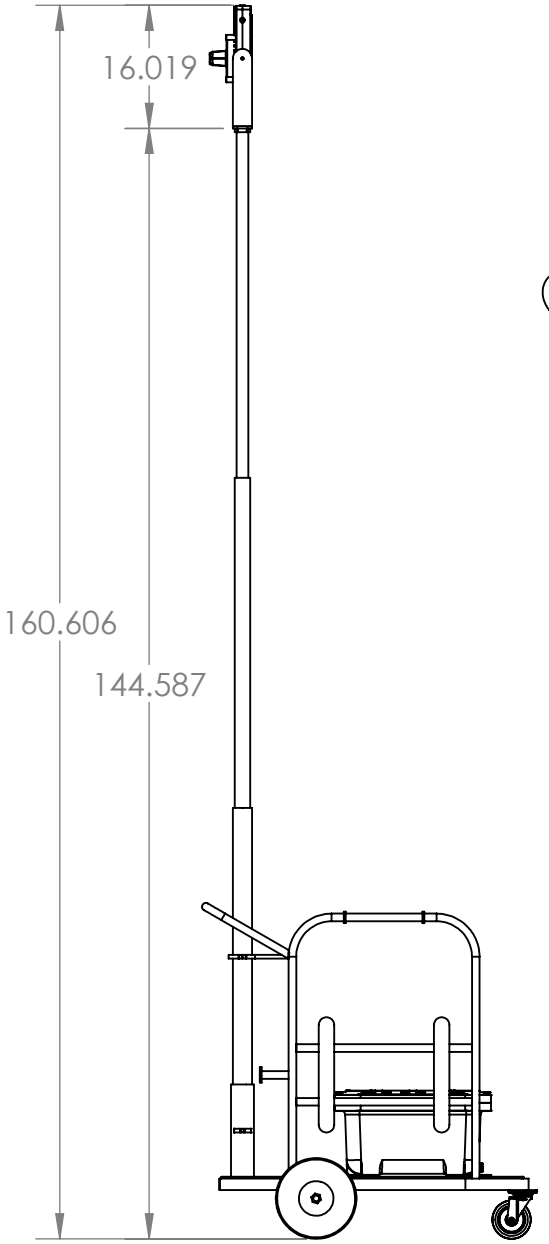

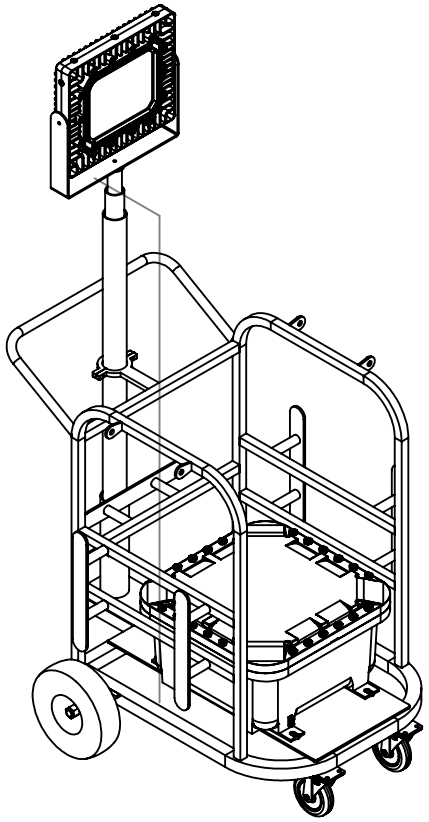

LARSON ELECTRONICS

PART NUMBER:

EPL-RPS-140A-APM-150LED-RT--DIMM-M3-100C

SIZE		REV
A		1

DIMENSIONS ARE IN INCHES				
DO NOT SCALE DRAWING	DATE	9/1/2021	SCALE: NTS	SHEET 3 OF 3

PROPRIETARY AND CONFIDENTIAL

THE INFORMATION CONTAINED IN THIS DRAWING IS THE SOLE PROPERTY OF LARSON ELECTRONICS LLC. ANY REPRODUCTION IN PART OR AS A WHOLE WITHOUT THE WRITTEN PERMISSION OF LARSON ELECTRONICS LLC IS PROHIBITED.

5 4 3 2 1