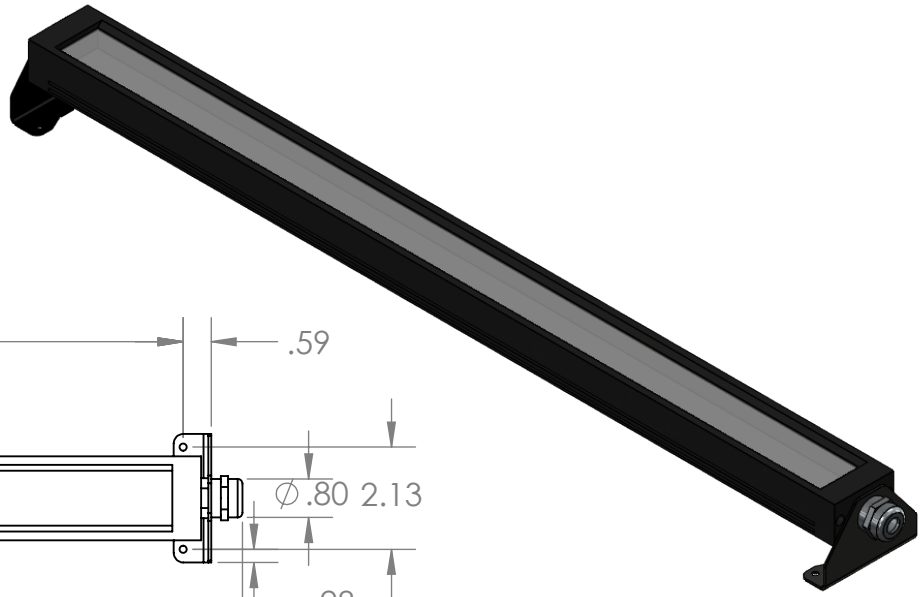

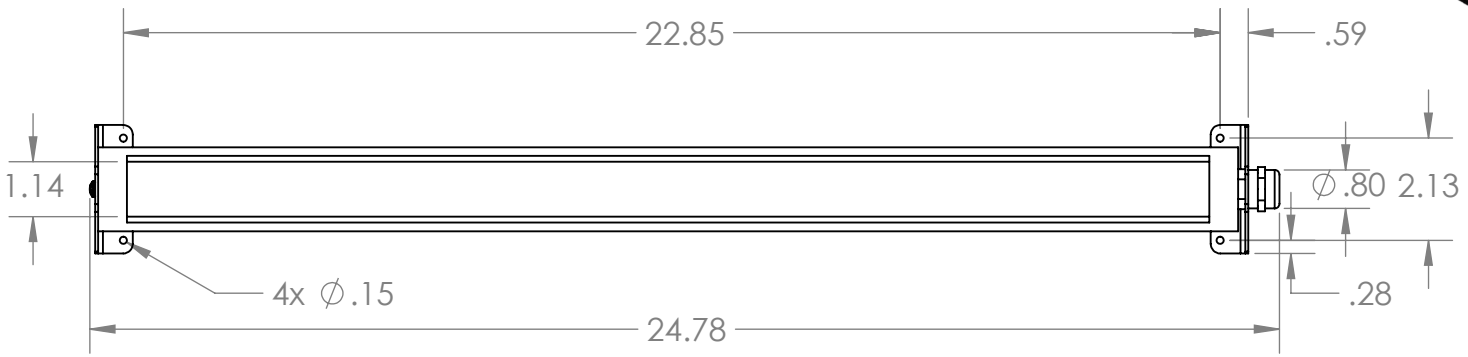

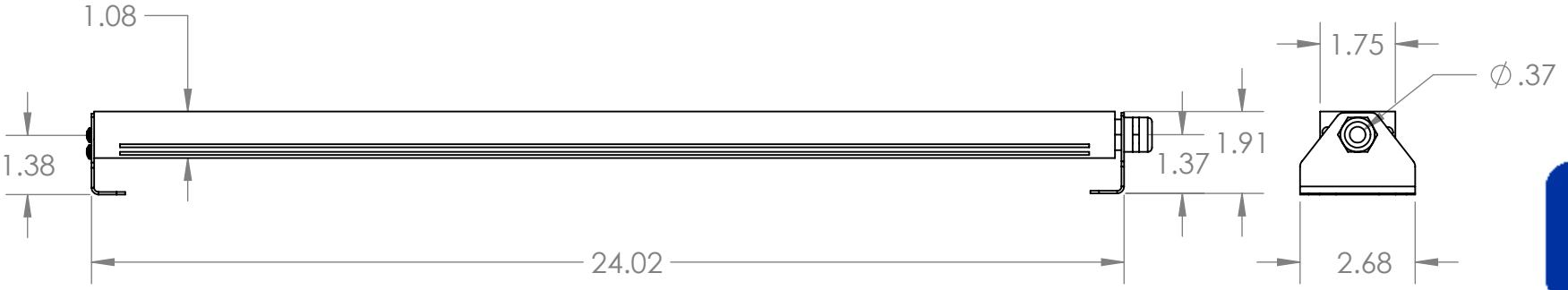

LARSON ELECTRONICS

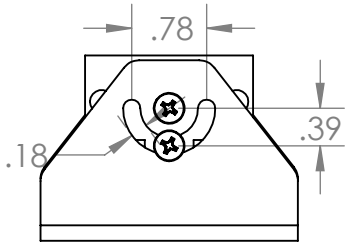

SIDE VIEW

PART NUMBER:

HAL-24-IPS-LED-UVA-1227

SIZE		REV
A		1

DIMENSIONS ARE IN INCHES			SCALE: NTS		SHEET 1 OF 1
DO NOT SCALE DRAWING	DATE	4/8/2019			

PROPRIETARY AND CONFIDENTIAL
THE INFORMATION CONTAINED IN THIS DRAWING IS THE SOLE PROPERTY OF LARSON ELECTRONICS LLC. ANY REPRODUCTION IN PART OR AS A WHOLE WITHOUT THE WRITTEN PERMISSION OF LARSON ELECTRONICS LLC IS PROHIBITED.

5 4 3 2 1