REV	DESCRIPTION	DATE
A	PRODUCTION RELEASE	04/29/2022

EPL-MJ-XXW-LED-1227

LARSON ELECTRONICS®

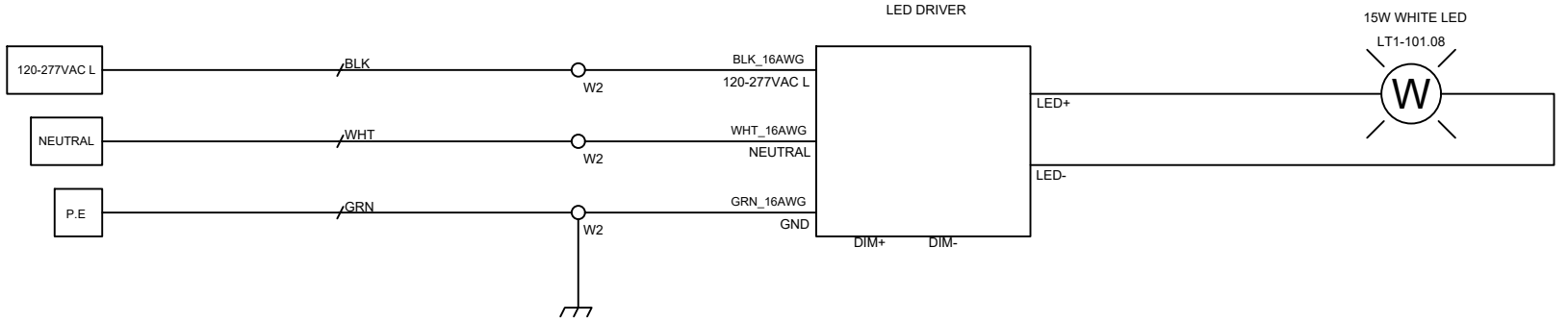

TAGS	QTY	CATALOG	DESCRIPTION
LT1-101.08	1	N/A	LED Light
W2	3	UNV00009802	2 HOLES WAGO

LARSON ELECTRONICS
9419 E US HWY 175,
KEMP, TX 75143

TITLE			
EPL-MJ-XXW-LED-1227			
DRAWN BY	DATE	REV	
K.NGUYEN	04/29/2022	A	
CHECKED BY	SHEET #	DRAWING #	
S.DESAI	1 OF 1	101	