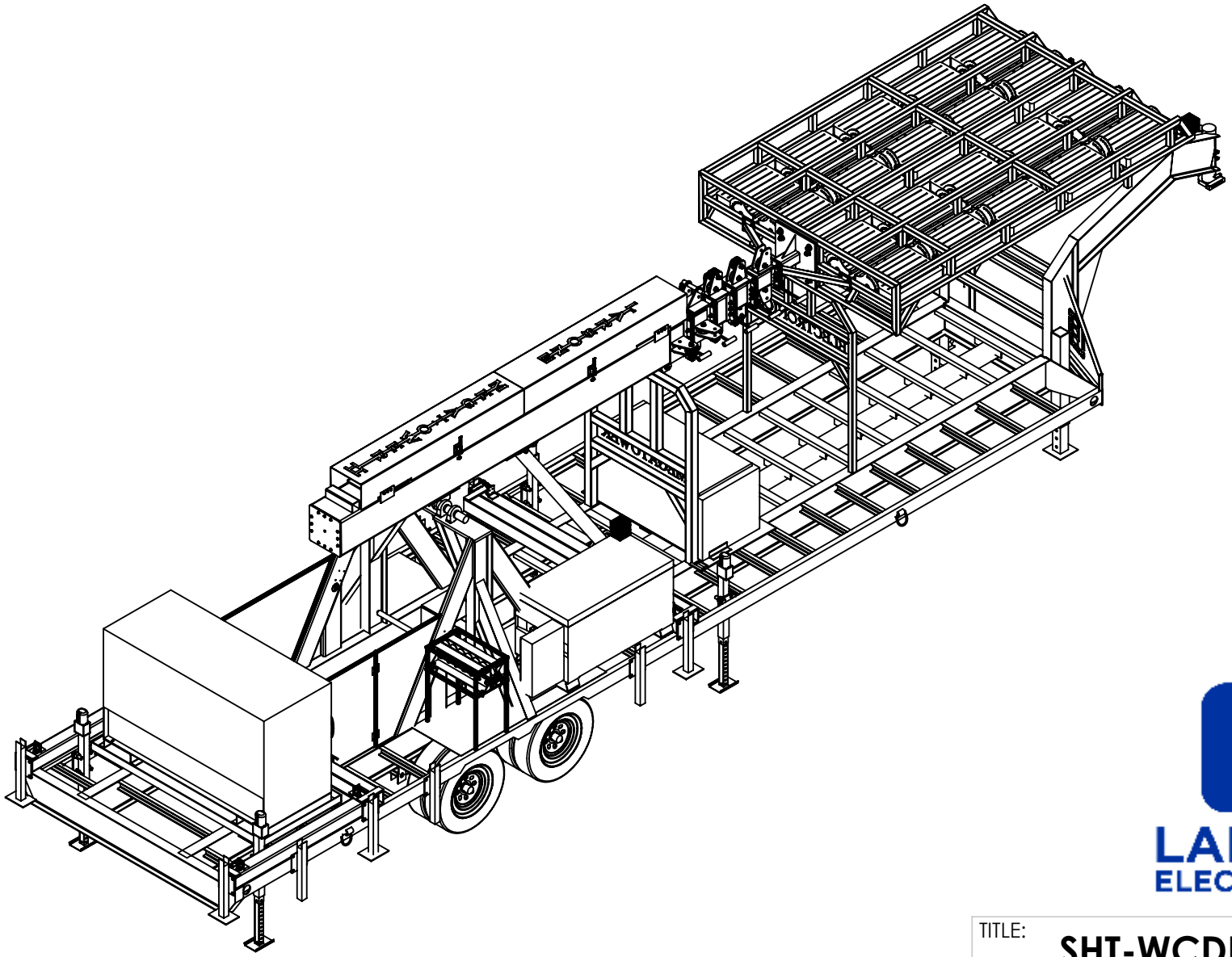

LARSON ELECTRONICS

TITLE:

SHT-WCDE-20-HLM65-20X500LTL-LED-WSM

SIZE	DWG. NO.	REV
A		

DIMENSIONS ARE IN INCHES				
DO NOT SCALE DRAWING	DATE	06/19/2018	SCALE: NTS	SHEET 1 OF 4

PROPRIETARY AND CONFIDENTIAL

THE INFORMATION CONTAINED IN THIS DRAWING IS THE SOLE PROPERTY OF LARSON ELECTRONICS LLC. ANY REPRODUCTION IN PART OR AS A WHOLE WITHOUT THE WRITTEN PERMISSION OF LARSON ELECTRONICS LLC IS PROHIBITED.

5 4 3 2 1

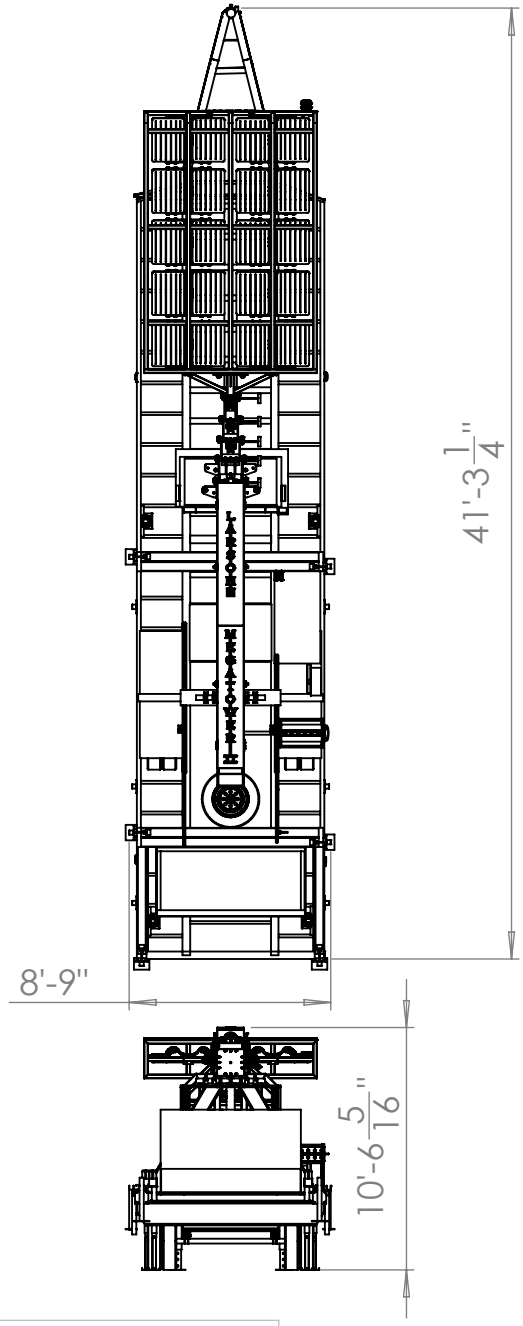

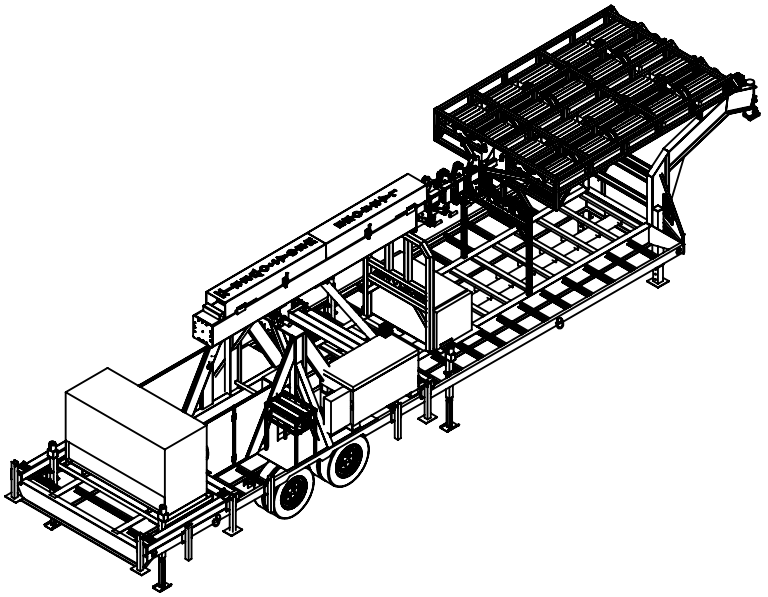

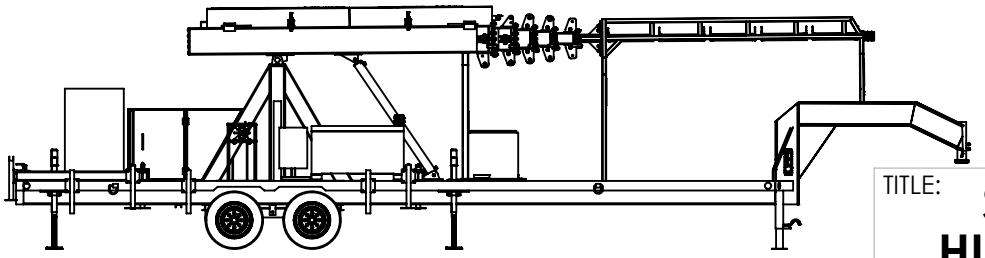

LARSON ELECTRONICS

TITLE: **SHT-WCDE-20-HLM65-20X500LTL-LED-WSM**

SIZE	DWG. NO.	REV
A		

DIMENSIONS ARE IN INCHES			SCALE: NTS	
DO NOT SCALE DRAWING	DATE	06/19/2018		SHEET 2 OF 4

PROPRIETARY AND CONFIDENTIAL
THE INFORMATION CONTAINED IN THIS DRAWING IS THE SOLE PROPERTY OF LARSON ELECTRONICS LLC. ANY REPRODUCTION IN PART OR AS A WHOLE WITHOUT THE WRITTEN PERMISSION OF LARSON ELECTRONICS LLC IS PROHIBITED.

5 4 3 2 1

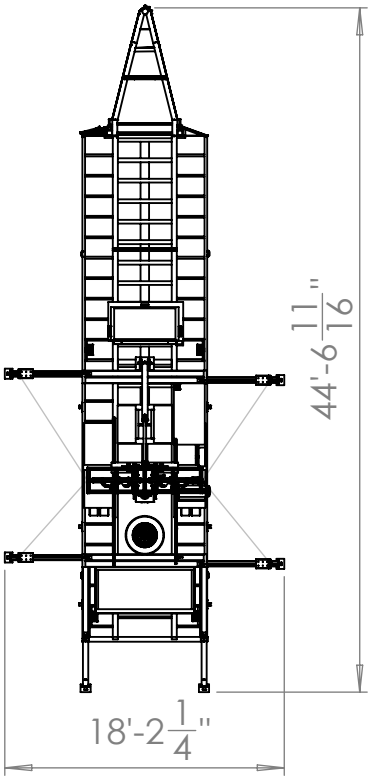

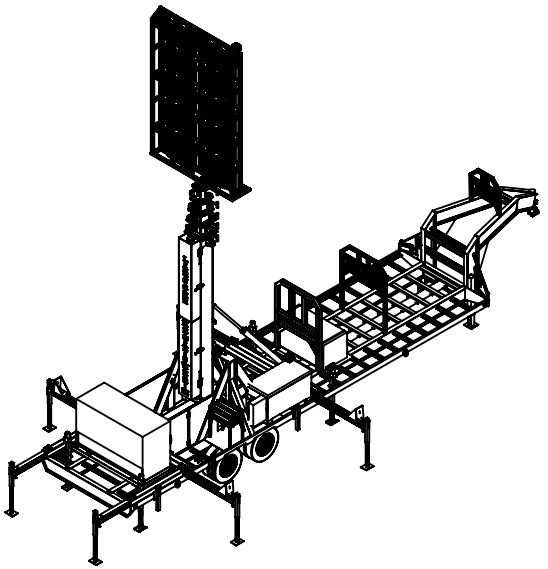

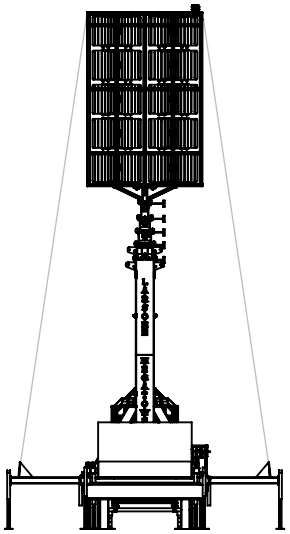

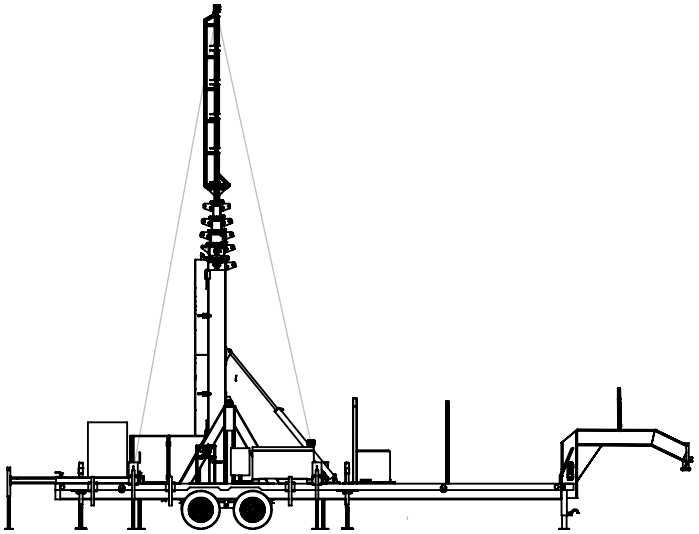

LARSON ELECTRONICS

TITLE: **SHT-WCDE-20-HLM65-20X500LTL-LED-WSM**

SIZE	DWG. NO.	REV
A		

DIMENSIONS ARE IN INCHES			SCALE: NTS	
DO NOT SCALE DRAWING	DATE	06/19/2018		SHEET 3 OF 4

PROPRIETARY AND CONFIDENTIAL
THE INFORMATION CONTAINED IN THIS DRAWING IS THE SOLE PROPERTY OF LARSON ELECTRONICS LLC. ANY REPRODUCTION IN PART OR AS A WHOLE WITHOUT THE WRITTEN PERMISSION OF LARSON ELECTRONICS LLC IS PROHIBITED.

5 4 3 2 1

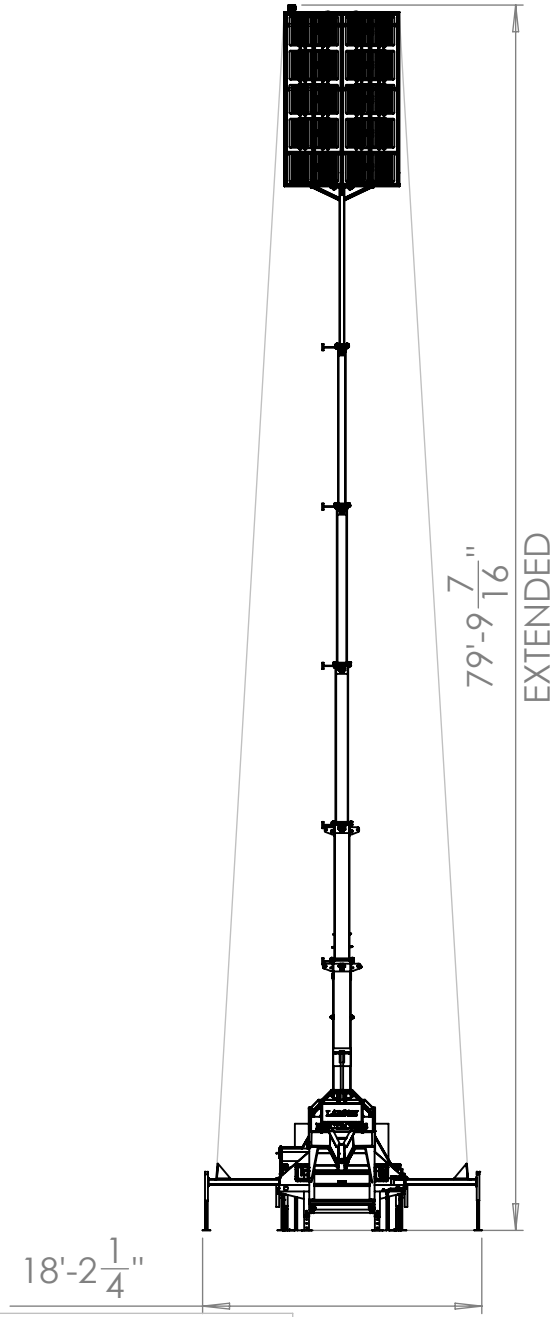

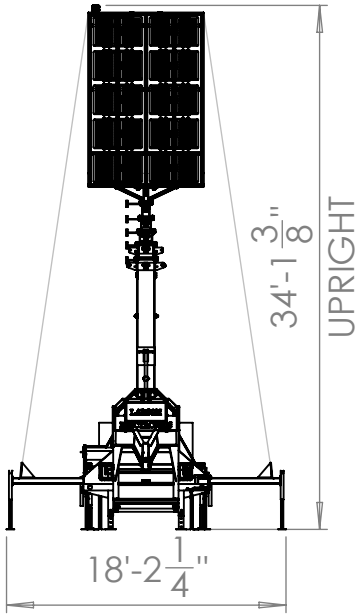

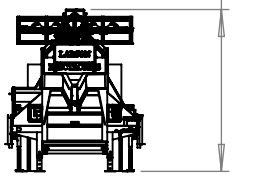

LARSON ELECTRONICS

TITLE: **SHT-WCDE-20-HLM65-20X500LTL-LED-WSM**

SIZE	DWG. NO.	REV
A		

DIMENSIONS ARE IN INCHES			SCALE: NTS
DO NOT SCALE DRAWING	DATE	06/19/2018	SHEET 4 OF 4

PROPRIETARY AND CONFIDENTIAL
THE INFORMATION CONTAINED IN THIS DRAWING IS THE SOLE PROPERTY OF LARSON ELECTRONICS LLC. ANY REPRODUCTION IN PART OR AS A WHOLE WITHOUT THE WRITTEN PERMISSION OF LARSON ELECTRONICS LLC IS PROHIBITED.

5 4 3 2 1