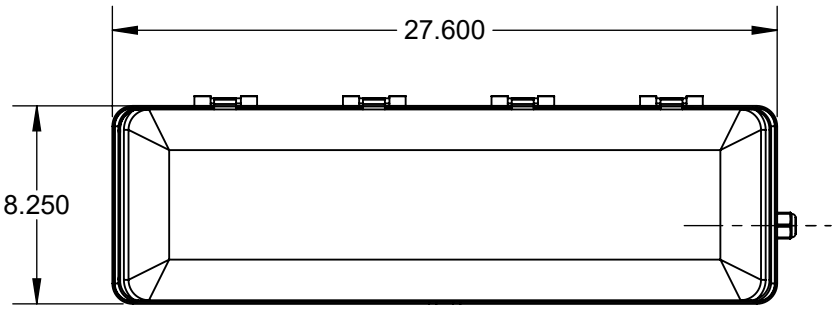

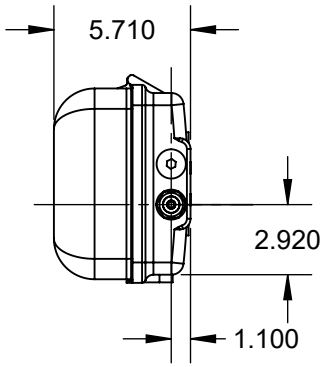

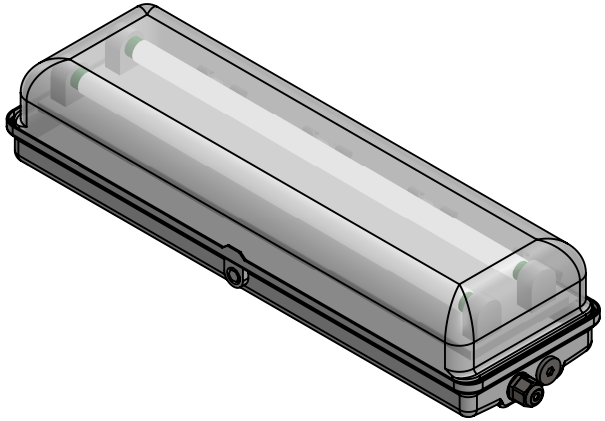

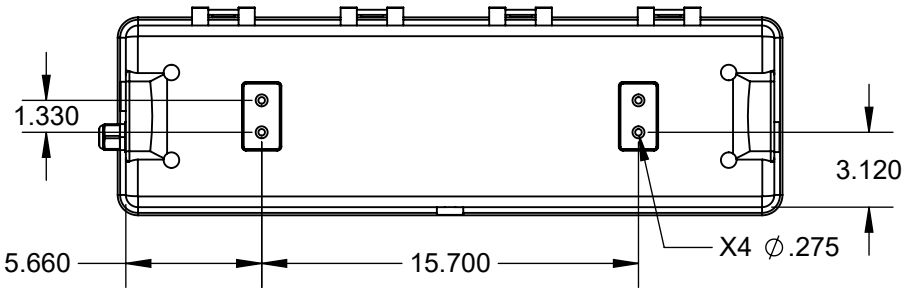

LARSON ELECTRONICS®

PART NUMBER:
CZ0865-2-18W-1-BATEX-HALP-24-2L-T8-2X14W-LED-R1-24V-SFC

SIZE	REV
A	1

DIMENSIONS ARE IN INCHES				
DO NOT SCALE DRAWING	DATE	3/5/2025	SCALE: NTS	SHEET 1 OF 1

PROPRIETARY AND CONFIDENTIAL
THE INFORMATION CONTAINED IN THIS DRAWING IS THE SOLE PROPERTY OF LARSON ELECTRONICS LLC. ANY REPRODUCTION IN PART OR AS A WHOLE WITHOUT THE WRITTEN PERMISSION OF LARSON ELECTRONICS LLC IS PROHIBITED.