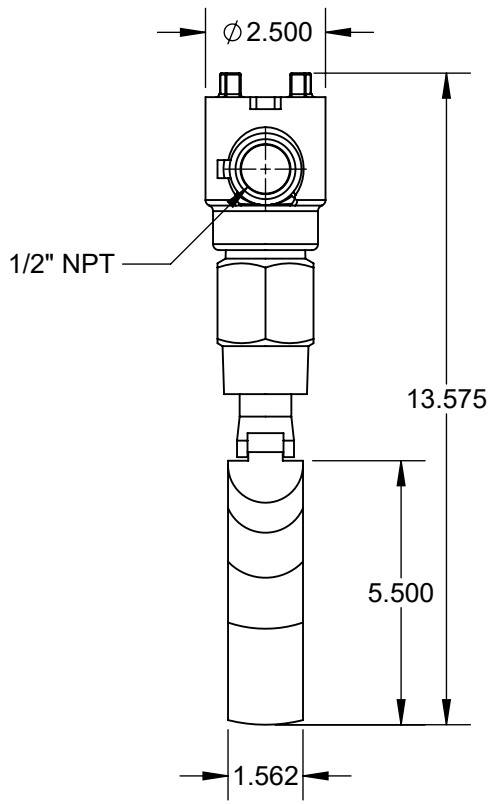

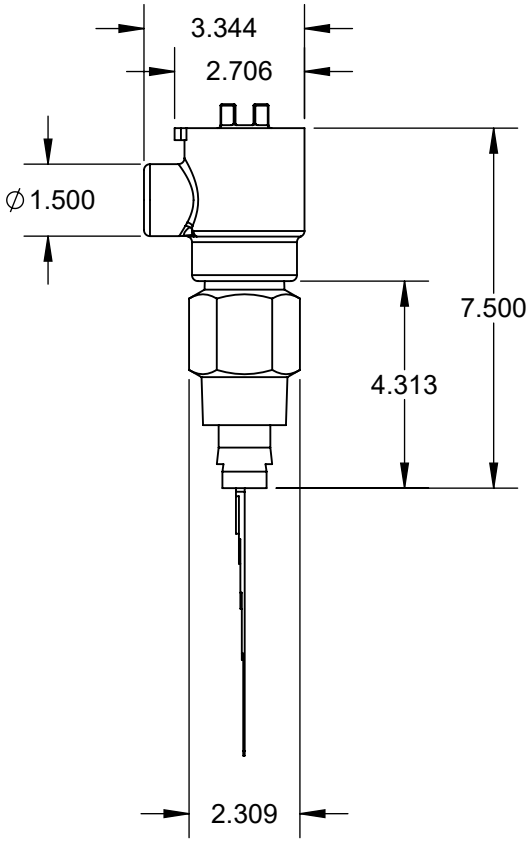

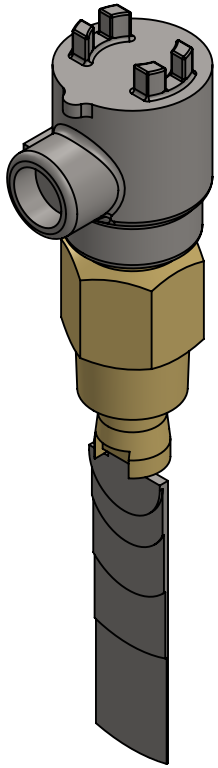

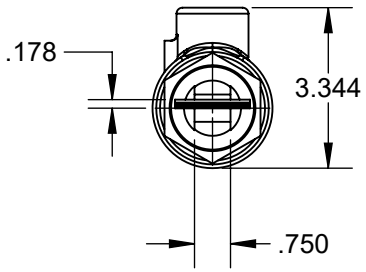

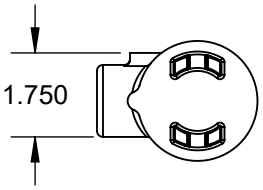

LARSON ELECTRONICS®

PART NUMBER:
EXP-SNR-FSS-AFPS-R1

SIZE		REV
A		1

DIMENSIONS ARE IN INCHES				
DO NOT SCALE DRAWING	DATE	10/6/2026	SCALE: NTS	SHEET 1 OF 1

PROPRIETARY AND CONFIDENTIAL
THE INFORMATION CONTAINED IN THIS DRAWING IS THE SOLE PROPERTY OF LARSON ELECTRONICS LLC. ANY REPRODUCTION IN PART OR AS A WHOLE WITHOUT THE WRITTEN PERMISSION OF LARSON ELECTRONICS LLC IS PROHIBITED.