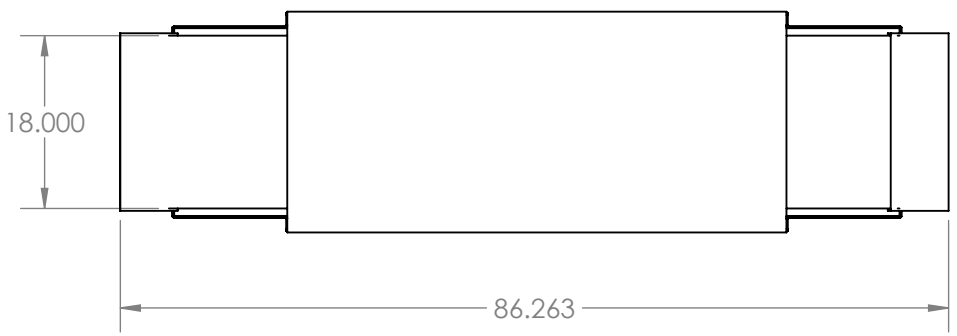

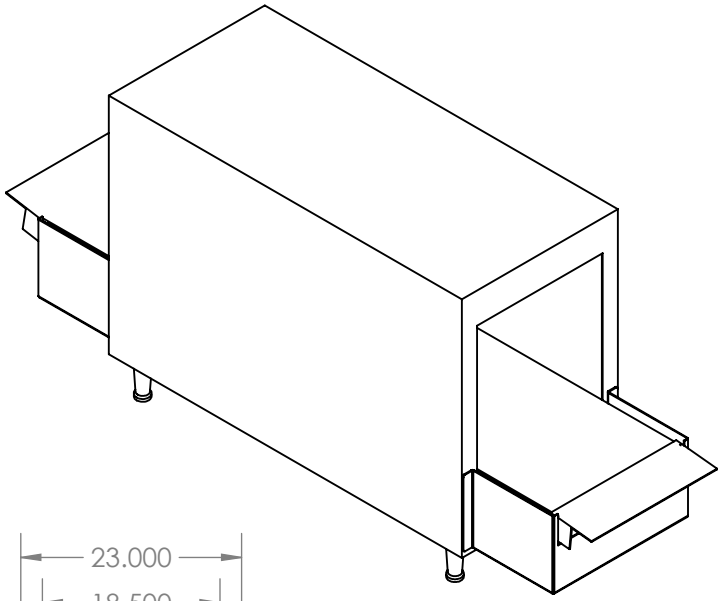

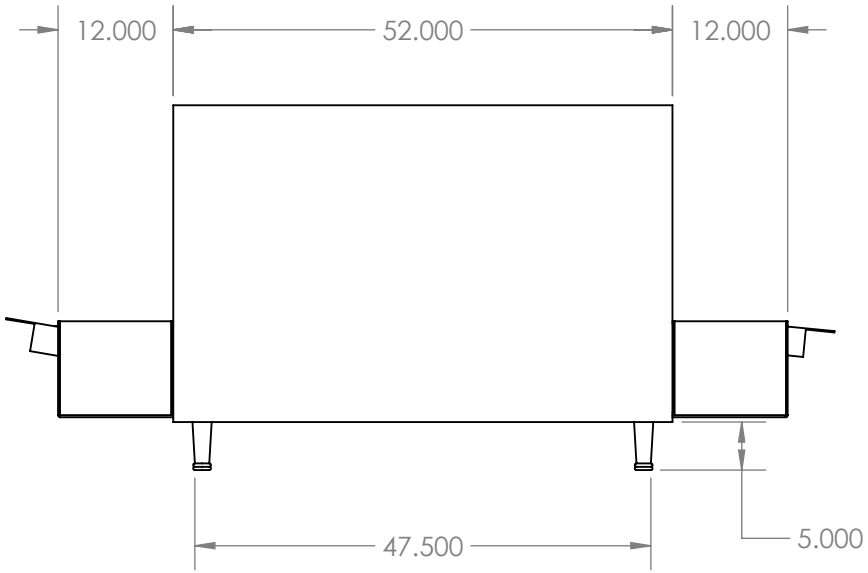

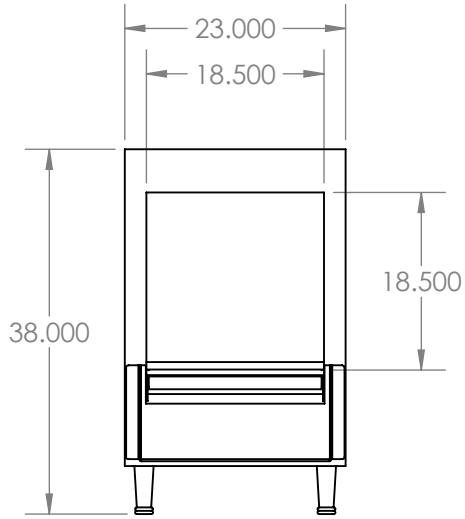

LARSON ELECTRONICS

TITLE:

IND-CBE-UVC-60-18X18-R3

FINISH			
SURFACE AREA [sq. in]		NAME	
DIMENSIONS ARE IN INCHES	DRAWN	CHRISTOPHER THAUER	
MATERIAL	CHECKED	N/A	
DO NOT SCALE DRAWING	DATE	1/21/2021	

SIZE **A** | DWG. NO. | REV

SCALE: NTS | SHEET 1 OF 1

PROPRIETARY AND CONFIDENTIAL
THE INFORMATION CONTAINED IN THIS DRAWING IS THE SOLE PROPERTY OF LARSON ELECTRONICS LLC. ANY REPRODUCTION IN PART OR AS A WHOLE WITHOUT THE WRITTEN PERMISSION OF LARSON ELECTRONICS LLC IS PROHIBITED.

UNLESS OTHERWISE NOTED:

Angle	+/- .5 deg
.X	+/- .02
.XX	+/- .01
.XXX	+/- .005