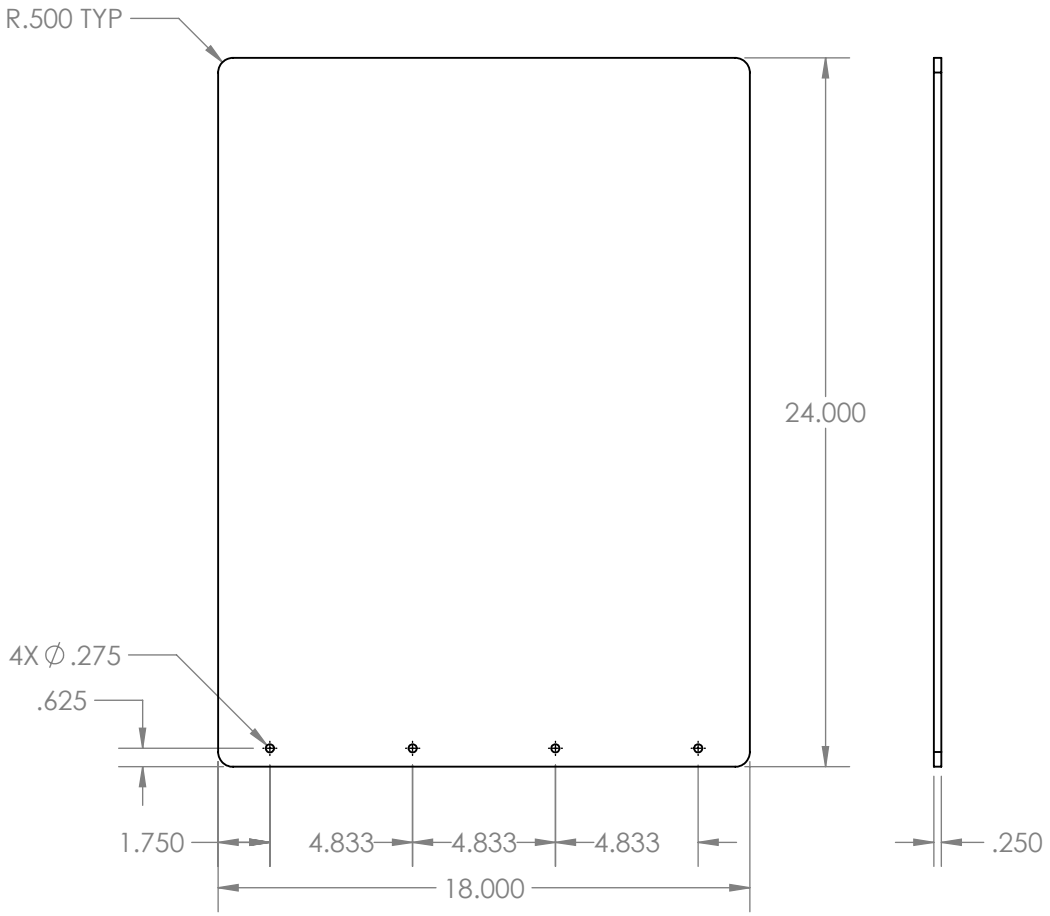

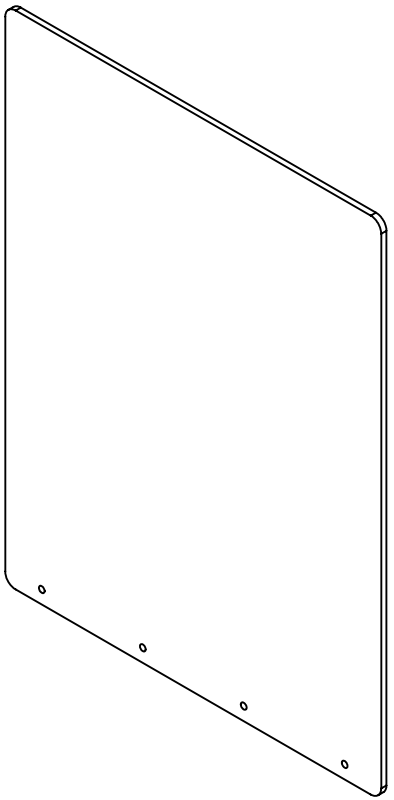

LARSON ELECTRONICS

TITLE:

XLE-MD-PCD-SD-4XH-R2

PROPRIETARY AND CONFIDENTIAL
THE INFORMATION CONTAINED IN THIS DRAWING IS THE SOLE PROPERTY OF LARSON ELECTRONICS LLC. ANY REPRODUCTION IN PART OR AS A WHOLE WITHOUT THE WRITTEN PERMISSION OF LARSON ELECTRONICS LLC IS PROHIBITED.

UNLESS OTHERWISE NOTED:

Angle	+/- .5 deg
.X	+/- .02
.XX	+/- .01
.XXX	+/- .005

FINISH			
SURFACE AREA [sq. in]			NAME
DIMENSIONS ARE IN INCHES		DRAWN	CHRISTOPHER THAUER
MATERIAL	Polycarbonate	CHECKED	N/A
DO NOT SCALE DRAWING		DATE	5/28/2020

SIZE	DWG. NO.	REV
A	FAB00001349	

SCALE: NTS | SHEET 1 OF 1