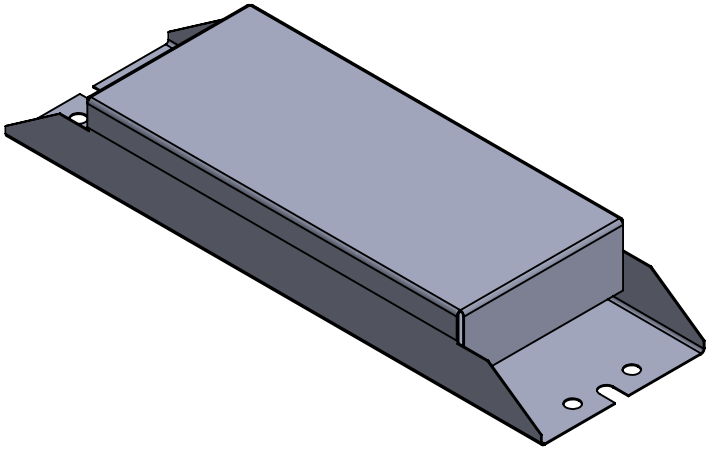

LARSON ELECTRONICS

PART NUMBER:

IND-UC.360-XX-V3-SP0109

SIZE		REV
A		**1**

SCALE: NTS | SHEET 1 OF 2

DATE 11/17/2022

DIMENSIONS ARE IN INCHES

DO NOT SCALE DRAWING

UNLESS OTHERWISE NOTED:

Angle	+/- .5 deg
.X	+/- .02
.XX	+/- .01
.XXX	+/- .005

PROPRIETARY AND CONFIDENTIAL

THE INFORMATION CONTAINED IN THIS DRAWING IS THE SOLE PROPERTY OF LARSON ELECTRONICS LLC. ANY REPRODUCTION IN PART OR AS A WHOLE WITHOUT THE WRITTEN PERMISSION OF LARSON ELECTRONICS LLC IS PROHIBITED.

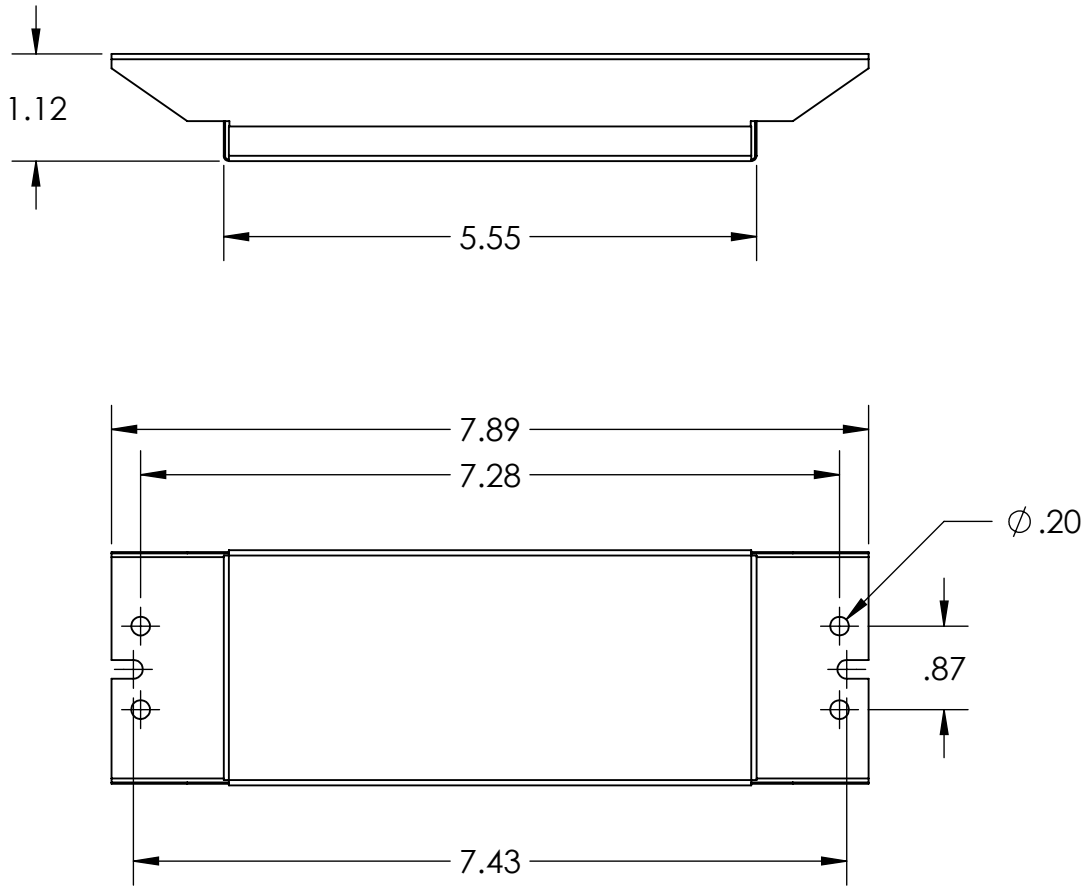

LARSON ELECTRONICS

PART NUMBER:

IND-UC.360-XX-V3-SP0109

PROPRIETARY AND CONFIDENTIAL
THE INFORMATION CONTAINED IN THIS DRAWING IS THE SOLE PROPERTY OF LARSON ELECTRONICS LLC. ANY REPRODUCTION IN PART OR AS A WHOLE WITHOUT THE WRITTEN PERMISSION OF LARSON ELECTRONICS LLC IS PROHIBITED.

UNLESS OTHERWISE NOTED:

Angle	+/- .5 deg
.X	+/- .02
.XX	+/- .01
.XXX	+/- .005

DIMENSIONS ARE IN INCHES

DO NOT SCALE DRAWING

DATE 11/17/2022

SIZE **A**

REV **1**

SCALE: NTS

SHEET 2 OF 2