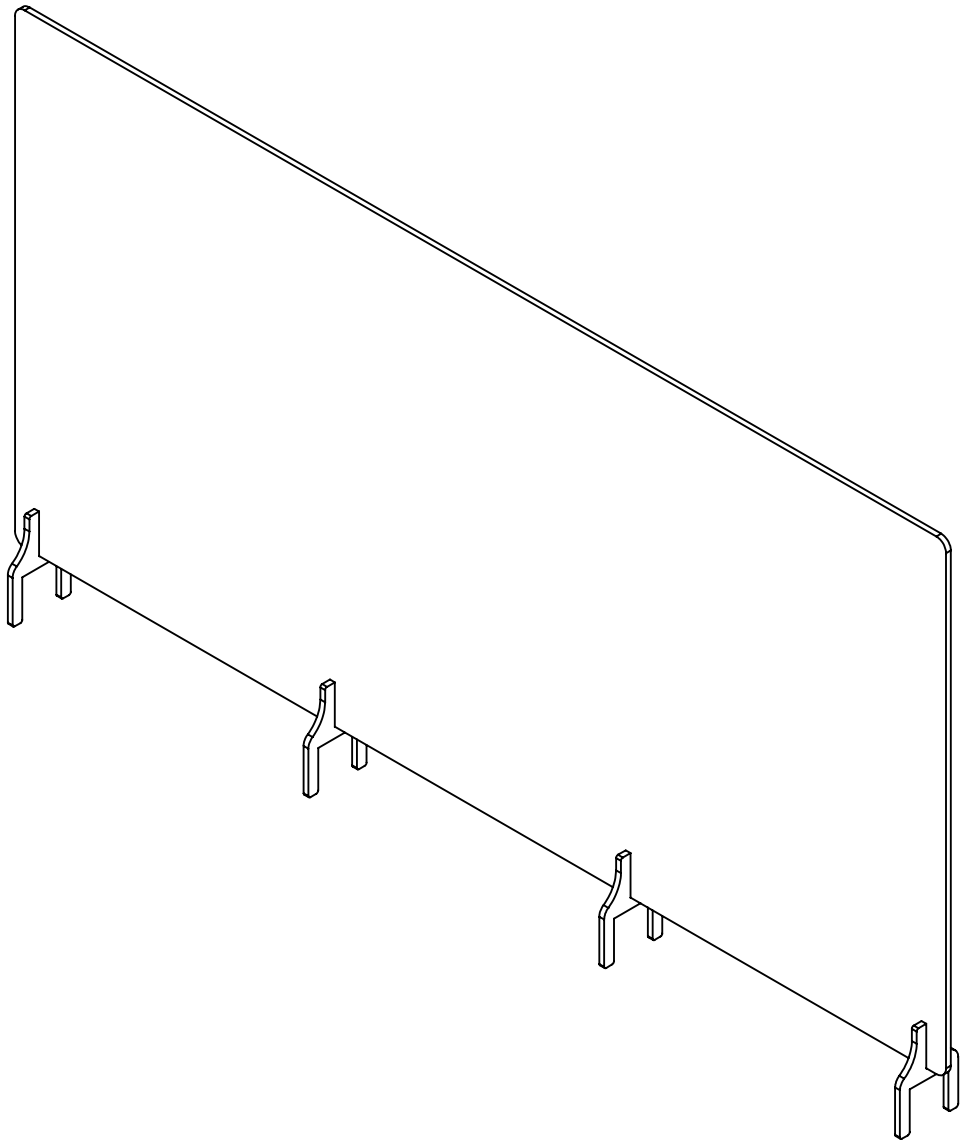

LARSON ELECTRONICS

TITLE:

XLE-MD-PCD-CD-R2

FINISH			
SURFACE AREA [sq. in]			NAME
DIMENSIONS ARE IN INCHES		DRAWN	CHRISTOPHER THAUER
MATERIAL		CHECKED	N/A
DO NOT SCALE DRAWING		DATE	5/29/2020

SIZE	DWG. NO.	REV
A	FAB00001347	
SCALE: NTS		SHEET 1 OF 4

PROPRIETARY AND CONFIDENTIAL
THE INFORMATION CONTAINED IN THIS DRAWING IS THE SOLE PROPERTY OF LARSON ELECTRONICS LLC. ANY REPRODUCTION IN PART OR AS A WHOLE WITHOUT THE WRITTEN PERMISSION OF LARSON ELECTRONICS LLC IS PROHIBITED.

UNLESS OTHERWISE NOTED:

Angle	+/- .5 deg
.X	+/- .02
.XX	+/- .01
.XXX	+/- .005

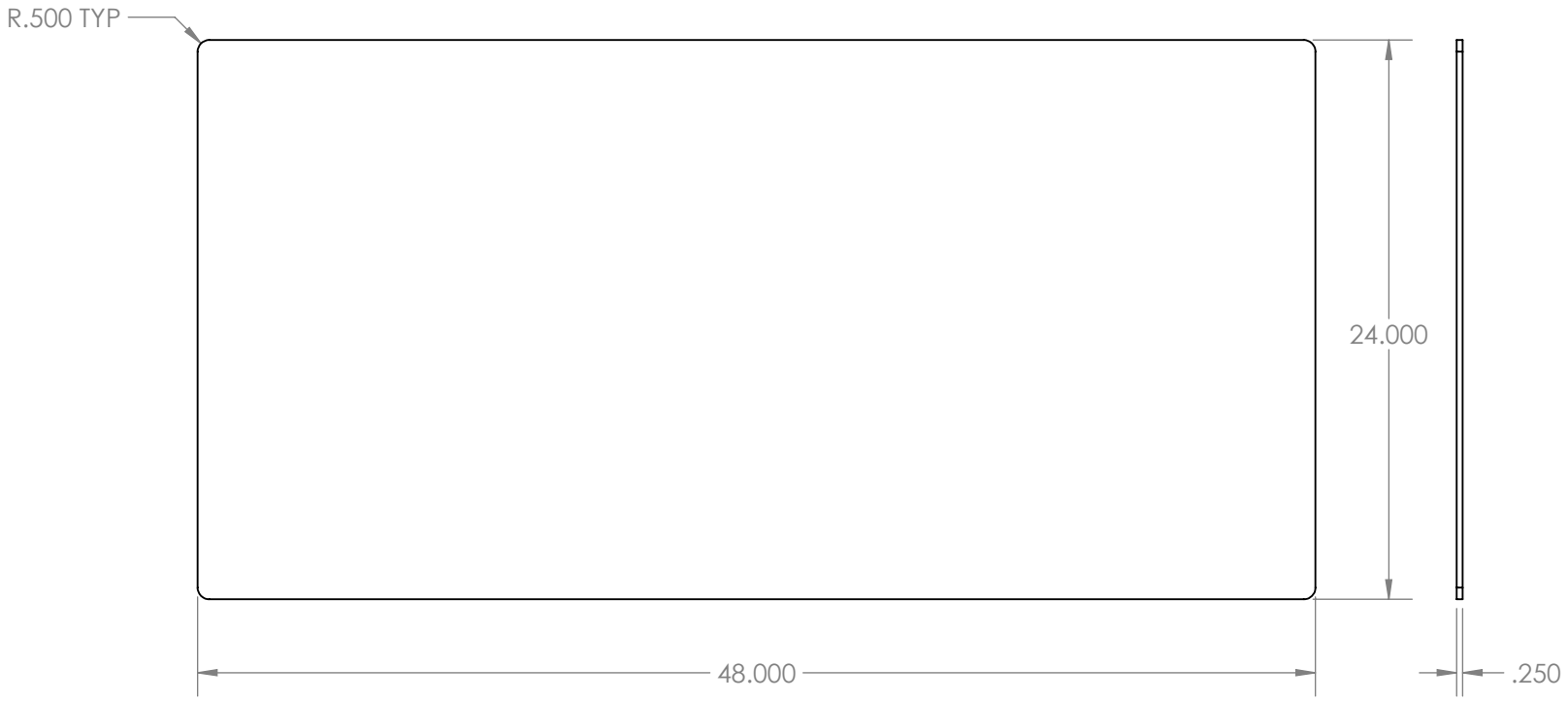

LARSON ELECTRONICS

TITLE:

GUARD

FINISH			
SURFACE AREA [sq. in]			NAME
DIMENSIONS ARE IN INCHES		DRAWN	CHRISTOPHER THAUER
MATERIAL	Polycarbonate	CHECKED	N/A
DO NOT SCALE DRAWING		DATE	5/29/2020

SIZE	DWG. NO.	REV
A	FAB00001347-1	

SCALE: NTS | SHEET 2 OF 4

PROPRIETARY AND CONFIDENTIAL
THE INFORMATION CONTAINED IN THIS DRAWING IS THE SOLE PROPERTY OF LARSON ELECTRONICS LLC. ANY REPRODUCTION IN PART OR AS A WHOLE WITHOUT THE WRITTEN PERMISSION OF LARSON ELECTRONICS LLC IS PROHIBITED.

UNLESS OTHERWISE NOTED:

Angle	+/- .5 deg
.X	+/- .02
.XX	+/- .01
.XXX	+/- .005

***NOTE: Dimension is based on customer's cubicle wall width**

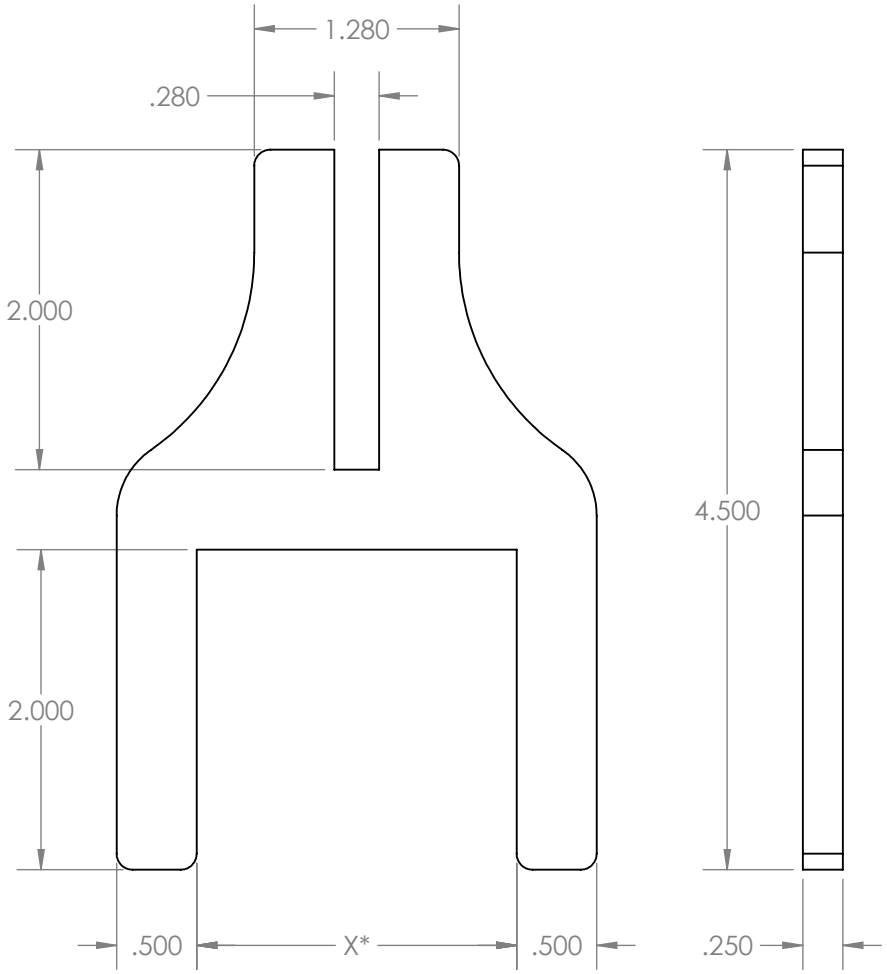

LARSON ELECTRONICS

TITLE:

SUPPORT

FINISH			
SURFACE AREA [sq. in]			NAME
DIMENSIONS ARE IN INCHES		DRAWN	CHRISTOPHER THAUER
MATERIAL	Polycarbonate	CHECKED	N/A
DO NOT SCALE DRAWING		DATE	5/29/2020

SIZE	DWG. NO.	REV
A	FAB00001347-2	

SCALE: NTS | SHEET 3 OF 4

PROPRIETARY AND CONFIDENTIAL
THE INFORMATION CONTAINED IN THIS DRAWING IS THE SOLE PROPERTY OF LARSON ELECTRONICS LLC. ANY REPRODUCTION IN PART OR AS A WHOLE WITHOUT THE WRITTEN PERMISSION OF LARSON ELECTRONICS LLC IS PROHIBITED.

UNLESS OTHERWISE NOTED:

Angle	+/- .5 deg
.X	+/- .02
.XX	+/- .01
.XXX	+/- .005

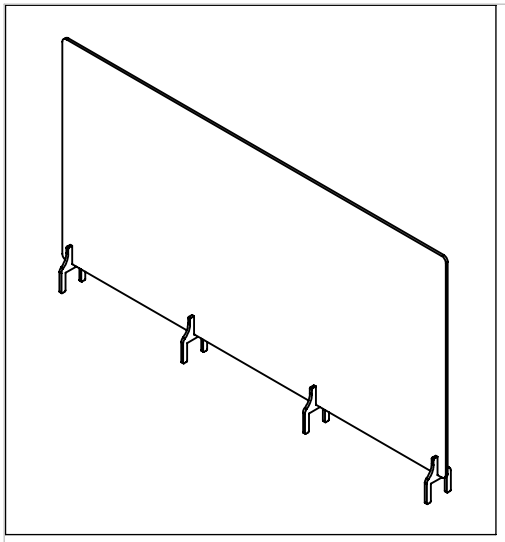

ITEM NO.	PART NAME	DWG. NO.	QTY.
1	Guard	FAB00001347-1	1
2	Support	FAB00001347-2	4

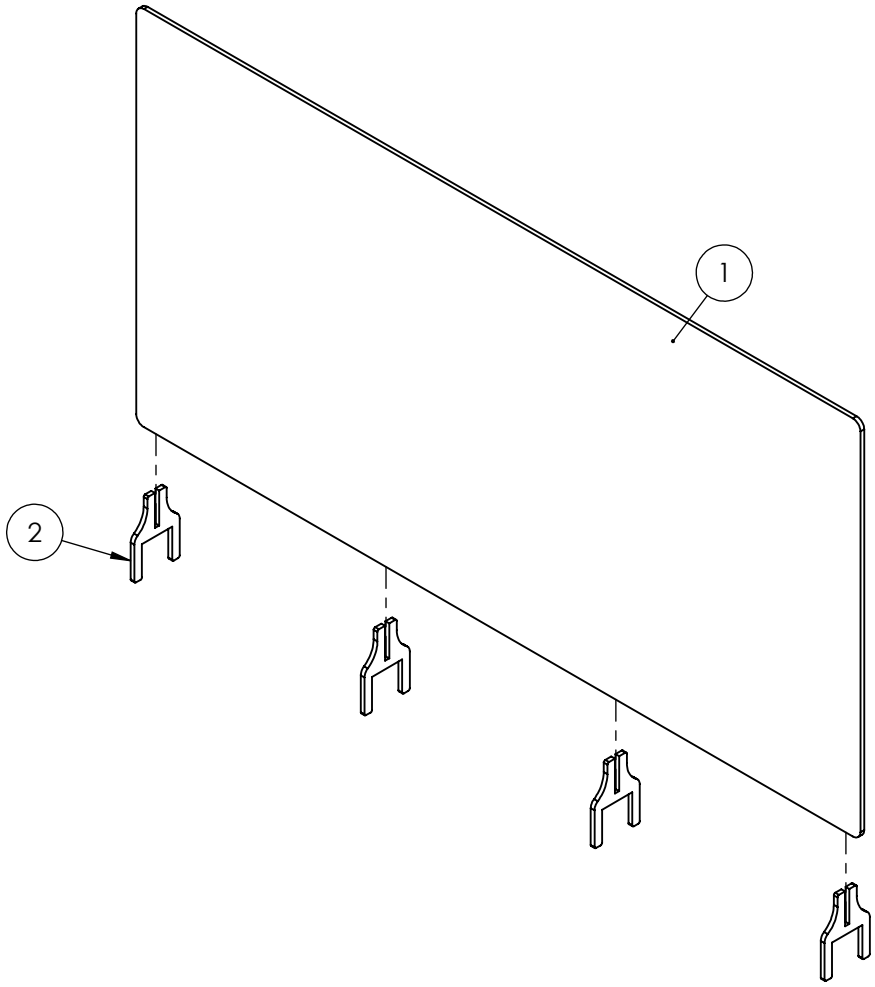

LARSON ELECTRONICS

TITLE:

XLE-MD-PCD-CD-R2

PROPRIETARY AND CONFIDENTIAL
THE INFORMATION CONTAINED IN THIS DRAWING IS THE SOLE PROPERTY OF LARSON ELECTRONICS LLC. ANY REPRODUCTION IN PART OR AS A WHOLE WITHOUT THE WRITTEN PERMISSION OF LARSON ELECTRONICS LLC IS PROHIBITED.

UNLESS OTHERWISE NOTED:
Angle +/- .5 deg
.X +/- .02
.XX +/- .01
.XXX +/- .005

FINISH			
SURFACE AREA [sq. in]			NAME
DIMENSIONS ARE IN INCHES		DRAWN	CHRISTOPHER THAUER
MATERIAL		CHECKED	N/A
DO NOT SCALE DRAWING		DATE	5/29/2020

SIZE	DWG. NO.	REV
A	FAB00001347	

SCALE: NTS | SHEET 4 OF 4