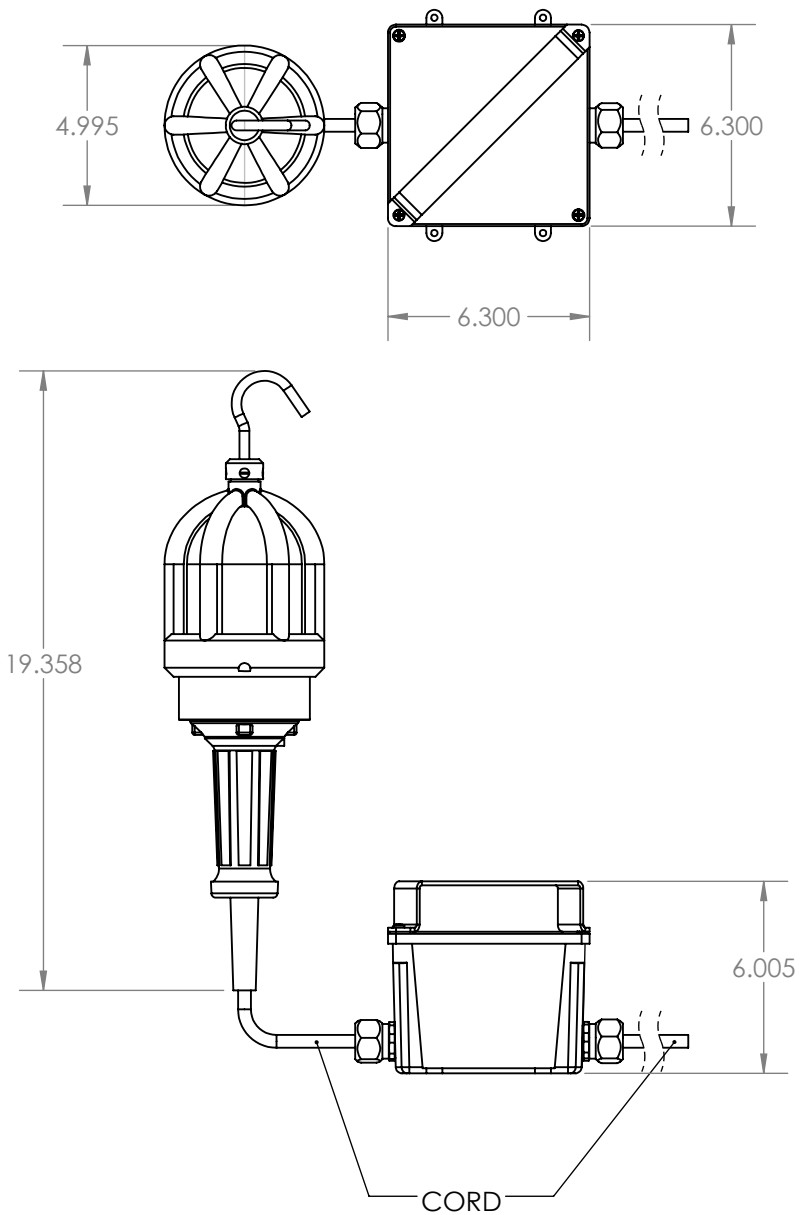

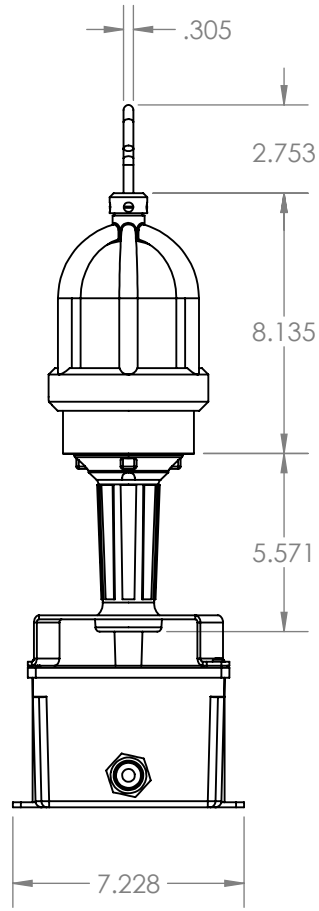

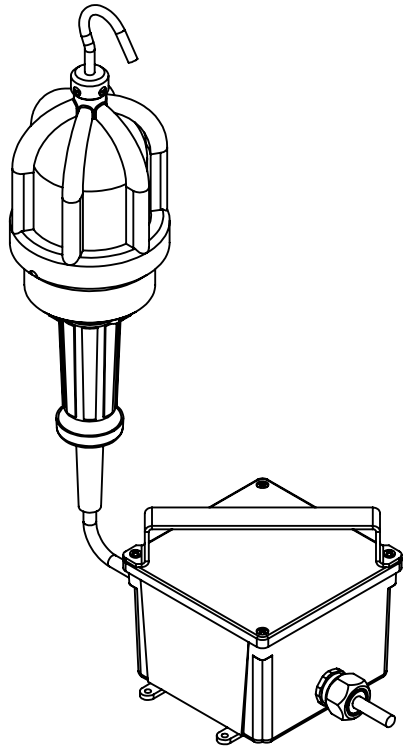

LARSON ELECTRONICS

TITLE:

EPL-230X Series

PROPRIETARY AND CONFIDENTIAL
THE INFORMATION CONTAINED IN THIS DRAWING IS THE SOLE PROPERTY OF LARSON ELECTRONICS LLC. ANY REPRODUCTION IN PART OR AS A WHOLE WITHOUT THE WRITTEN PERMISSION OF LARSON ELECTRONICS LLC IS PROHIBITED.

		NAME
DIMENSIONS ARE IN INCHES	DRAWN	CHRIS THAUER
MATERIAL	CHECKED	JEREMY BLANKENSHIP
DO NOT SCALE DRAWING		

SIZE	DWG. NO.	REV
A		
SCALE: 1:6		SHEET 4 OF 5

5 4 3 2 1

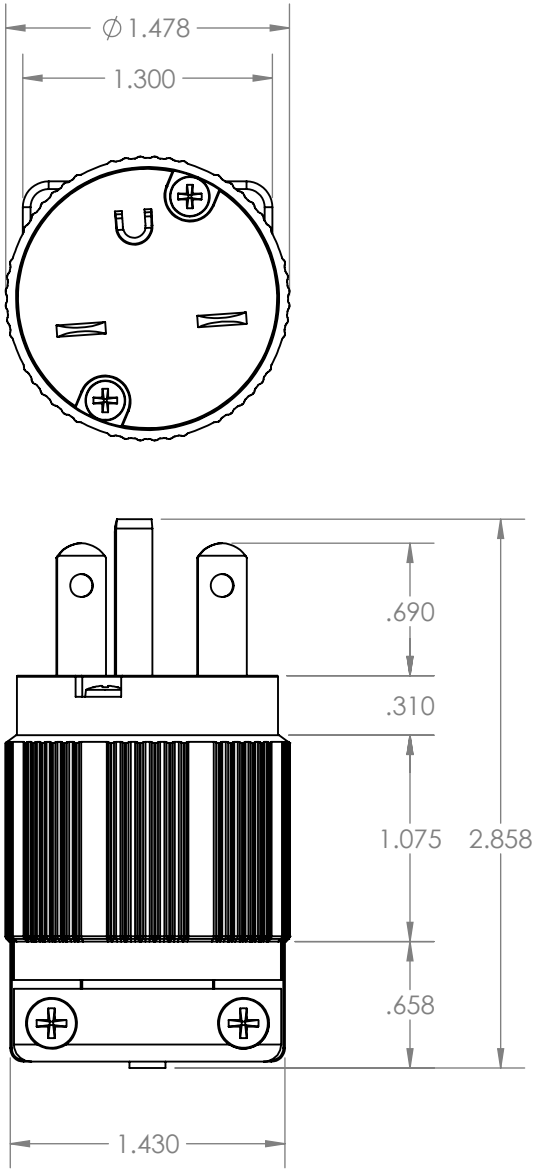

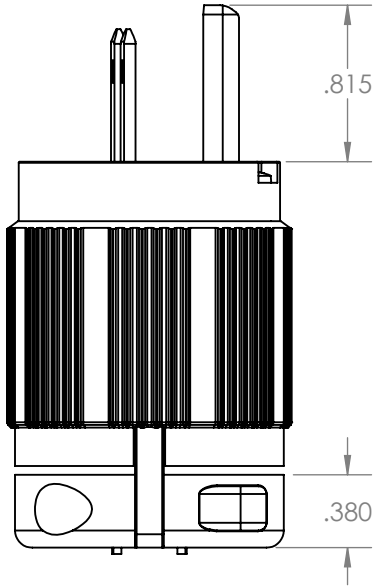

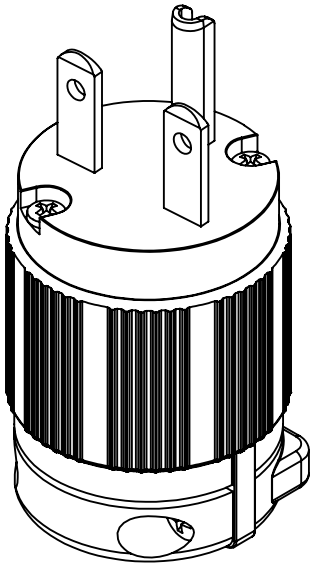

LARSON ELECTRONICS

TITLE:

6-15P

PROPRIETARY AND CONFIDENTIAL
THE INFORMATION CONTAINED IN THIS DRAWING IS THE SOLE PROPERTY OF LARSON ELECTRONICS LLC. ANY REPRODUCTION IN PART OR AS A WHOLE WITHOUT THE WRITTEN PERMISSION OF LARSON ELECTRONICS LLC IS PROHIBITED.

		NAME			
DIMENSIONS ARE IN INCHES	DRAWN	CHRIS THAUER	SIZE **A**	DWG. NO.	REV
MATERIAL	CHECKED	JEREMY BLANKENSHIP			
DO NOT SCALE DRAWING			SCALE: 1:1		SHEET 1 OF 6

5 4 3 2 1

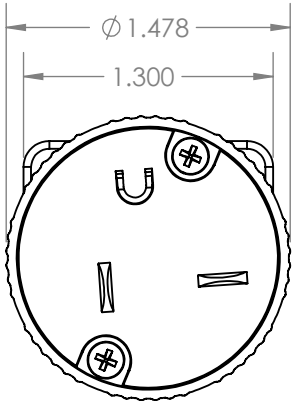

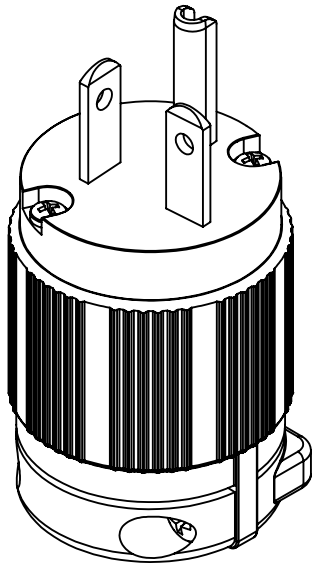

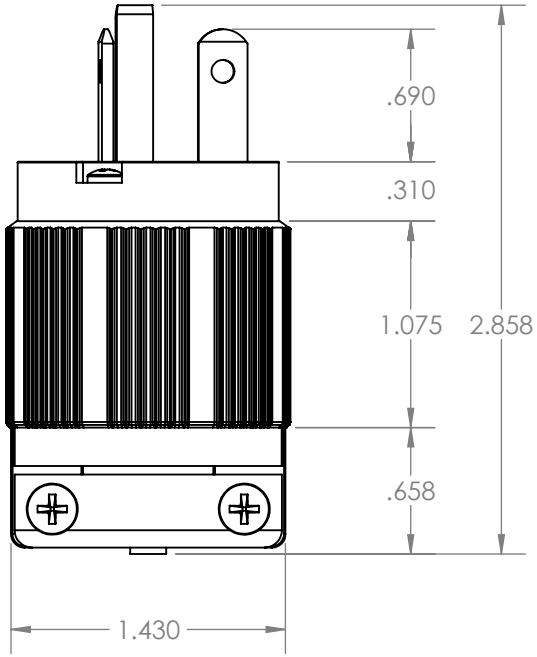

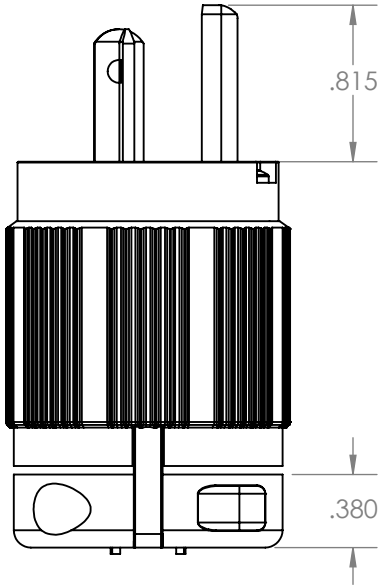

LARSON ELECTRONICS

TITLE:

6-20P

PROPRIETARY AND CONFIDENTIAL
THE INFORMATION CONTAINED IN THIS DRAWING IS THE SOLE PROPERTY OF LARSON ELECTRONICS LLC. ANY REPRODUCTION IN PART OR AS A WHOLE WITHOUT THE WRITTEN PERMISSION OF LARSON ELECTRONICS LLC IS PROHIBITED.

		NAME			
DIMENSIONS ARE IN INCHES	DRAWN	CHRIS THAUER	SIZE **A**	DWG. NO.	REV
MATERIAL	CHECKED	JEREMY BLANKENSHIP			
DO NOT SCALE DRAWING			SCALE: 1:1		SHEET 2 OF 6

5 4 3 2 1

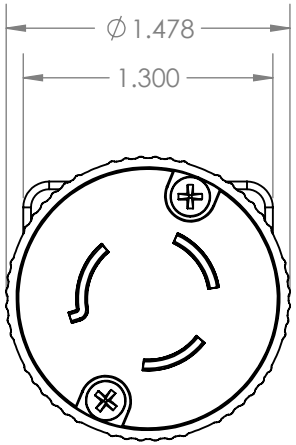

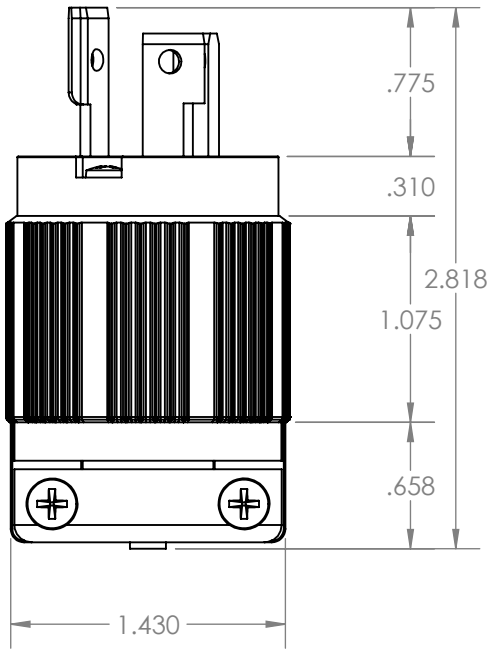

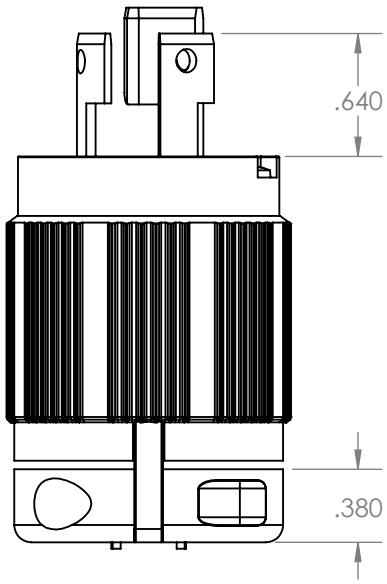

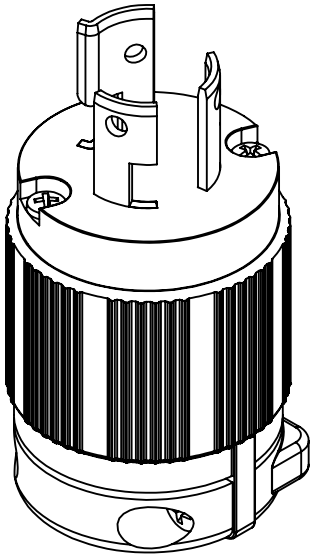

LARSON ELECTRONICS

TITLE:

L6-15P

PROPRIETARY AND CONFIDENTIAL
THE INFORMATION CONTAINED IN THIS DRAWING IS THE SOLE PROPERTY OF LARSON ELECTRONICS LLC. ANY REPRODUCTION IN PART OR AS A WHOLE WITHOUT THE WRITTEN PERMISSION OF LARSON ELECTRONICS LLC IS PROHIBITED.

		NAME			
DIMENSIONS ARE IN INCHES	DRAWN	CHRIS THAUER	SIZE **A**	DWG. NO.	REV
MATERIAL	CHECKED	JEREMY BLANKENSHIP			
DO NOT SCALE DRAWING			SCALE: 1:1		SHEET 3 OF 6

5 4 3 2 1

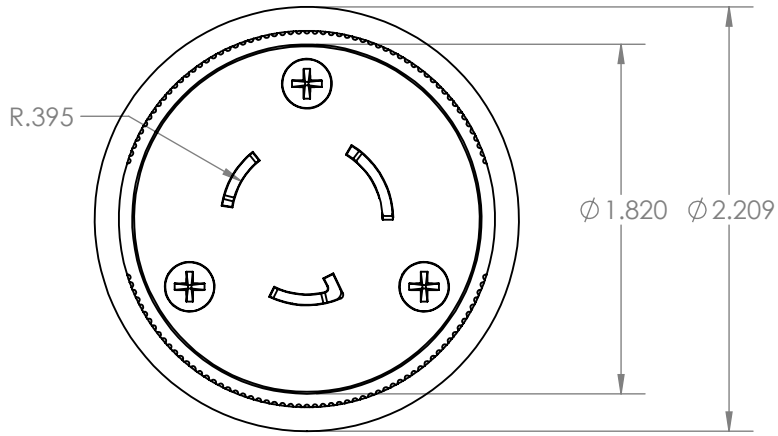

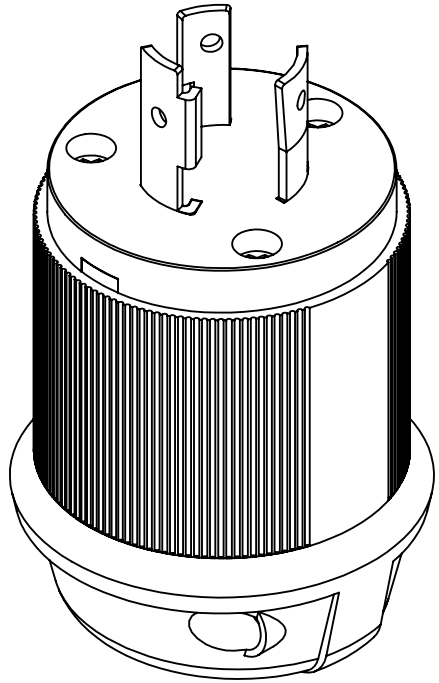

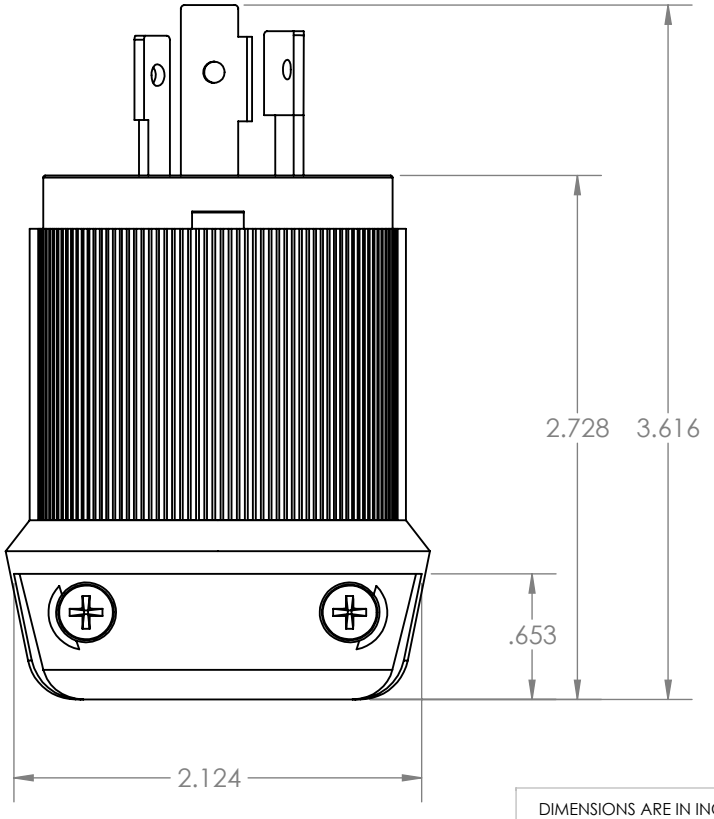

PROPRIETARY AND CONFIDENTIAL
THE INFORMATION CONTAINED IN THIS DRAWING IS THE SOLE PROPERTY OF LARSON ELECTRONICS LLC. ANY REPRODUCTION IN PART OR AS A WHOLE WITHOUT THE WRITTEN PERMISSION OF LARSON ELECTRONICS LLC IS PROHIBITED.

		NAME
DIMENSIONS ARE IN INCHES	DRAWN	CHRIS THAUER
MATERIAL	CHECKED	JEREMY BLANKENSHIP
DO NOT SCALE DRAWING		

TITLE:

L6-20P

SIZE	DWG. NO.	REV
A		
SCALE: 1:1		SHEET 4 OF 6

5 4 3 2 1

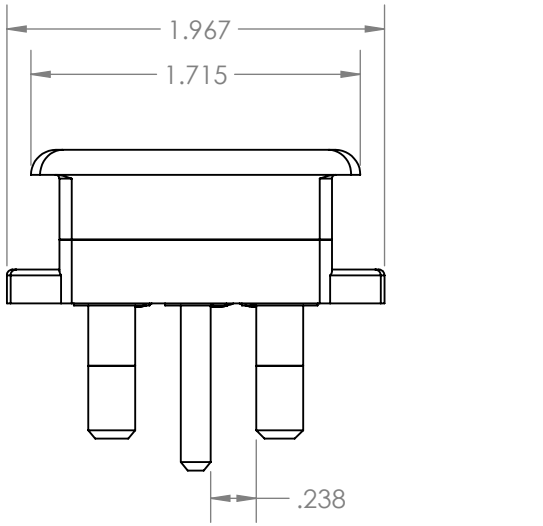

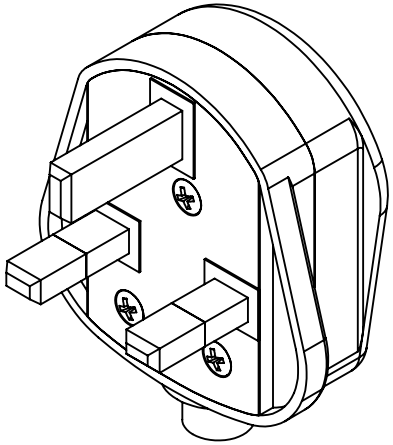

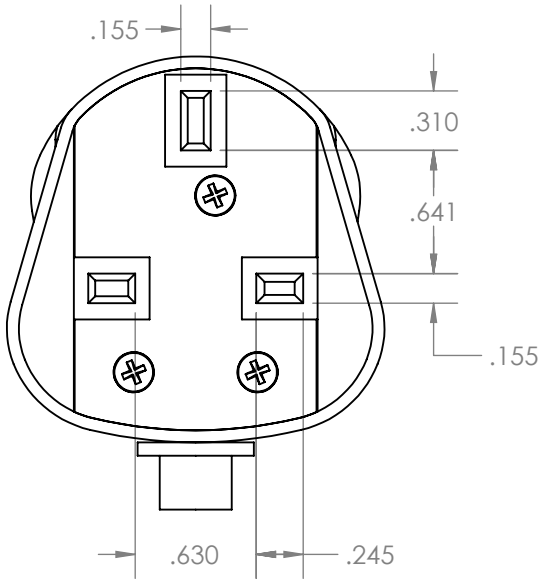

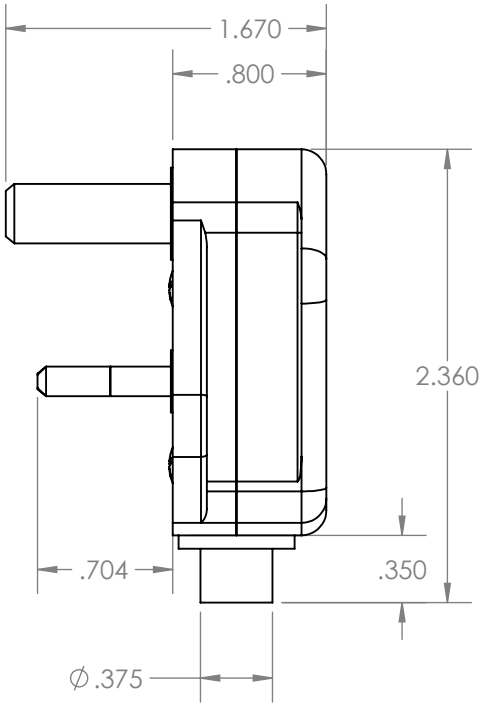

LARSON ELECTRONICS

TITLE:

BS1363

PROPRIETARY AND CONFIDENTIAL
THE INFORMATION CONTAINED IN THIS DRAWING IS THE SOLE PROPERTY OF LARSON ELECTRONICS LLC. ANY REPRODUCTION IN PART OR AS A WHOLE WITHOUT THE WRITTEN PERMISSION OF LARSON ELECTRONICS LLC IS PROHIBITED.

		NAME			
DIMENSIONS ARE IN INCHES	DRAWN	CHRIS THAUER	SIZE	DWG. NO.	REV
MATERIAL	CHECKED	JEREMY BLANKENSHIP	A		
DO NOT SCALE DRAWING			SCALE: 1:1		SHEET 5 OF 6

5 4 3 2 1

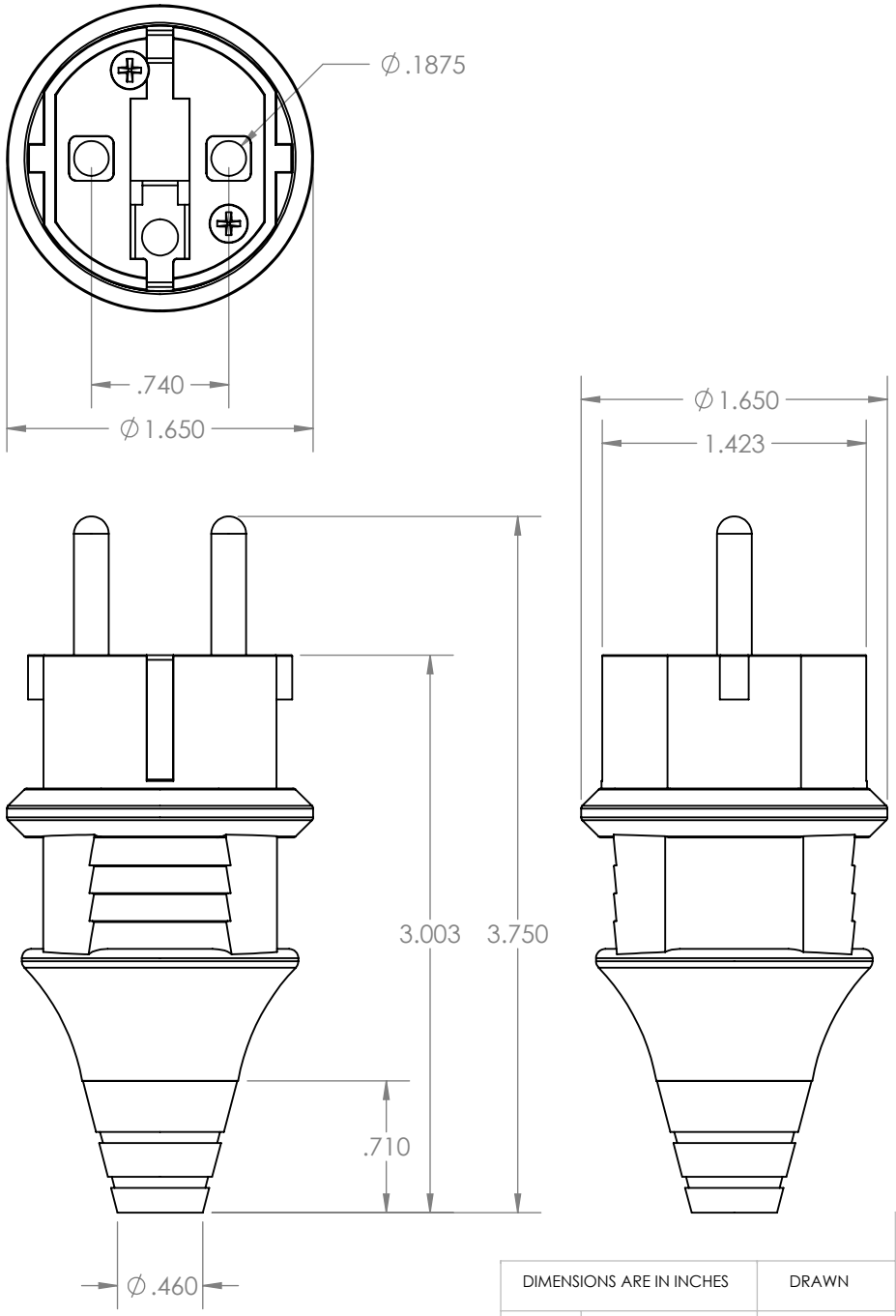

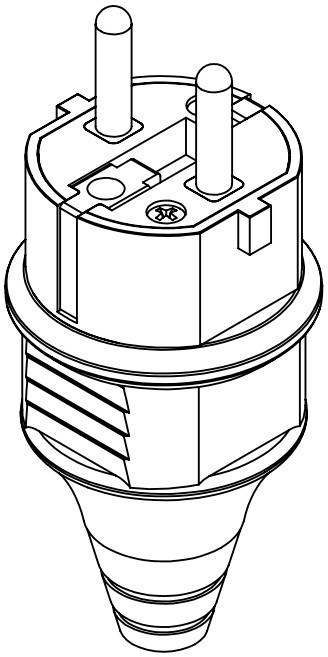

LARSON ELECTRONICS

TITLE:

SCHUKO

PROPRIETARY AND CONFIDENTIAL
THE INFORMATION CONTAINED IN THIS DRAWING IS THE SOLE PROPERTY OF LARSON ELECTRONICS LLC. ANY REPRODUCTION IN PART OR AS A WHOLE WITHOUT THE WRITTEN PERMISSION OF LARSON ELECTRONICS LLC IS PROHIBITED.

		NAME			
DIMENSIONS ARE IN INCHES	DRAWN	CHRIS THAUER	SIZE A	DWG. NO.	REV
MATERIAL	CHECKED	JEREMY BLANKENSHIP			
DO NOT SCALE DRAWING			SCALE: 1:1		SHEET 6 OF 6

5 4 3 2 1